Federal Aviation Administration – Regulations and Policies
Aviation Rulemaking Advisory Committee

Transport Airplane and Engine Issue Area
Powerplant Installation Harmonization Working Group

Task 1 – Installation

Task Assignment

Aviation Rulemaking Advisory Committee; Transport Airplane and Engine Subcommittee; Installation Harmonization Working Group

AGENCY: Federal Aviation Administration (FAA), DOT.

ACTION: Notice of establishment of installation harmonization working group.

SUMMARY: Notice is given of the establishment of the Installation Harmonization Working Group of the Transport Airplane and Engine Subcommittee. This notice informs the public of the activities of the Transport Airplane and Engine Subcommittee of the Aviation Rulemaking Advisory Committee.

FOR FURTHER INFORMATION CONTACT: Mr. William J. (Joe) Sullivan, Executive Director, Transport Airplane and Engine Subcommittee, Aircraft Certification Service (AIR-3), 800 Independence Avenue SW., Washington, DC 20591, Telephone: (202) 267-9554; FAX: (202) 267-5364.

SUPPLEMENTARY INFORMATION: The Federal Aviation Administration (FAA) established an Aviation Rulemaking Advisory Committee (56 FR 2190, January 22, 1991) which held its first meeting on May 23, 1991 (56 FR 20492, May 3, 1991). The Transport Airplane and Engine Subcommittee was established at that meeting to provide advice and recommendations to the Director, Aircraft Certification Service, FAA regarding the airworthiness standards for transport airplanes, engines and propellers in parts 25, 33, and 35 of the Federal Aviation Regulations (14 CFR parts 25, 23 and 35).

The FAA announced at the Joint Aviation Authorities (JAA)-Federal Aviation Administration (FAA) Harmonization Conference in Toronto, Ontario, Canada, (June 2-5, 1992) that it would consolidate within the Aviation Rulemaking Advisory Committee structure an ongoing objective to "harmonize" the Joint Aviation Requirements (JAR) and the Federal Aviation Regulations (FAR). Coincident with that announcement, the FAA assigned to the Transport Airplane and Engine Subcommittee those projects related to JAR/FAR 25, 33 and 35 harmonization which were then in the process of being coordinated between the JAA and the FAA. The harmonization process included the intention to present the results of JAA/FAA coordination to the public in the form of either a Notice of Proposed Rulemaking or an advisory circular—an objective comparable to and compatible with the assigned to the Aviation Rulemaking Advisory Committee. The Transport Airplane and Engine Subcommittee, consequently, established the Installation Harmonization Working Group.

Specifically, the Working Group's tasks are the following:

The Installation Harmonization Working Group is charged with making recommendations to the Transport Airplane and Engine Subcommittee concerning the FAA disposition of the following subjects recently coordinated between the JAA and FAA:

Task 1—Installations (Engines): Develop recommendations concerning new or revised requirements for the installation of engines on transport category airplanes and determine the relationship, if any, of the requirements of FAR 25.1309 to these engine installations (FAR 25.901).

Task 2—Windmilling Without Oil: Determine the need for requirements for turbine engine windmilling without oil (FAR 25.903).

Task 3—Non-contained Failures: Revise advisory material on non-contained engine failure requirements (FAR 25.903 and related provisions of FAR Parts 23, 27, 29, 33, and 35, as appropriate; AC 20-128). The working group should draw members for this task from the interests represented by the General Aviation and Business Airplane, and Rotorcraft Subcommittees.

Task 4—Thrust Reversing Systems: Develop recommendations concerning new or revised requirements and guidance material for turbojet engine thrust reversing systems (FAR 25.933).

Reports:

A. Recommend time line(s) for completion of each task, including rationale, for Subcommittee consideration at the meeting of the subcommittee held following publication of this notice.

B. Give a detailed conceptual presentation on each task to the Subcommittee before proceeding with the work stated under items C and D, below. If tasks 1, 2, and 4 require the development of more than one Notice of Proposed Rulemaking, identify what proposed amendments will be included in each notice.

C. Draft a Notice of Proposed Rulemaking for tasks 1, 2 and 4 proposing new or revised requirements, a supporting economic analysis, and other required analysis, with any other collateral documents (such as Advisory Circulars) the Working Group determines to be needed.

D. Draft a change to Advisory Circular 120-128 for task 3 providing appropriate advisory material for each task. When the detailed briefing under item B, above, and this report are presented to the subcommittee, the Subcommittee and Working Group Chairs should arrange for a joint meeting with the General Aviation and Business Airplane and Rotorcraft Subcommittees to consider and join in the consensus on the results of those reports.

E. Give a status report on each task at each meeting of the Subcommittee.

The Installation Harmonization Working Group will be comprised of experts from those organizations having an interest in the tasks assigned. A Working Group member need not necessarily be a representative of one of the organizations of the parent Transport Airplane and Engine Subcommittee or of the full Aviation Rulemaking Advisory Committee. An individual who has expertise in the subject matter and wishes to become a member of the Working Group should write the person listed under the caption **FOR FURTHER INFORMATION CONTACT** expressing that desire, describing his or her interest in the task, and the expertise he or she would bring to the Working Group. The request will be reviewed with the Subcommittee and Working Group Chairs and the individual will be advised whether or not the request can be accommodated.

The Secretary of Transportation has determined that the information and use of the Aviation Rulemaking Advisory Committee and its subcommittees are necessary in the public interest in connection with the performance of duties of the FAA by law. Meetings of the full Committee and any subcommittees will be open to the public except as authorized by section 10(d) of the Federal Advisory Committee Act. Meetings of the Installation Harmonization Working Group will not be open to the public except to the extent that individuals with an interest and expertise are selected to participate. No public announcement of Working Group meetings will be made.

Issued in Washington, DC, on December 4, 1992.

William J. Sullivan,

Executive Director, Transport Airplane and Engine Subcommittee, Aviation Rulemaking Advisory Committee.

[FR Doc. 92-30118 Filed 12-10-92; 8:45 am]

BILLING CODE 4910-13-M

Recommendation Letter

Gerald R. Mack
Director
Certification &
Government Requirements

Boeing Commercial Airplane Group
P.O. Box 3707, MS 67-UM
Seattle, WA 98124-2207

August 8, 1995
B-T000-ARAC-95-006

Mr. Anthony J. Broderick
Associate Administrator for Regulations and Certification, (AVR-1)
Department of Transportation
Federal Aviation Administration
800 Independence Avenue, S.W.
Washington DC 20591
Tele: (202) 267-3131
Fax: (202) 267-5364

BOEING

Dear Mr. Broderick:

On behalf of the Aviation Rulemaking Advisory Committee, I am pleased to submit the enclosed recommendations for publication on the following subjects:

AC 20.128A Design Considerations for Minimizing Hazards Caused by Uncontained Turbine Engine and Auxilary Power Unit Rotor Failure

AC 29.2A Advisory Material for Compliance with Rotor Burst Rule

The enclosed packages are in the form of final draft ACs. The packages were developed by the Powerplant Installation Harmonization Working Group chaired by Bruce Honsberger of Boeing and Wim Overmars of Fokker. The membership of the group is a good balance of interested parties in the U.S. and Europe. This group can be made available if needed for docket review.

The members of ARAC appreciate the opportunity to participate in the FAA rulemaking process and fully endorse these recommendations.

Sincerely,

G.R. Mack

Gerald R. Mack
Assistant Chairman
Transport Airplane & Engine Issues Group
Aviation Rulemaking Advisory Committee
Tele: (206) 234-9570, Fax: 237-0192, Mailstop: 67-UM

Enclosure

cc:	M. Borfitz	(617) 238-7199
	B. Honsberger	67-UW
	S. Miller	(206) 227-1100
	W. Overmars	31-206052895

Acknowledgement Letter

U.S. Department
of Transportation

**Federal Aviation
Administration**

800 Independence Ave., S.W.
Washington, D.C. 20591

SEP 18 1995

Mr. Gerald R. Mack
Aviation Rulemaking Advisory Committee
Boeing Commercial Airplane Group
P.O. Box 3707, M/S 67-UM
Seattle, WA 98124-2207

Dear Mr. Mack:

Thank you for your August 8 letter forwarding the Aviation Rulemaking Advisory Committee's (ARAC) recommendations in the form of two advisory circulars: Design Considerations for Minimizing Hazards Caused by Uncontained Turbine Engine and Auxiliary Power Unit Rotor Failure; and Advisory Material for Compliance with Rotor Burst Rule.

I want to thank the aviation community for its commitment to ARAC and its expenditure of resources to develop the recommendations. We in the Federal Aviation Administration pledge to process the documents expeditiously as high-priority actions.

Again, let me thank ARAC, and particularly the Powerplant Installation Harmonization Working Group, for its dedicated efforts in completing this task.

Sincerely,

Anthony J. Broderick
Associate Administrator for
Regulation and Certification

Recommendation

Gerald R. Mack
Director
Certification &
Government Requirements

Boeing Commercial Airplane Group
P.O. Box 3707, MS 67-UM
Seattle, WA 98124-2207

August 8, 1995
B-T000-ARAC-95-006

Mr. Anthony J. Broderick
Associate Administrator for Regulations and Certification, (AVR-1)
Department of Transportation
Federal Aviation Administration
800 Independence Avenue, S.W.
Washington DC 20591
Tele: (202) 267-3131
Fax: (202) 267-5364

BOEING

Dear Mr. Broderick:

On behalf of the Aviation Rulemaking Advisory Committee, I am pleased to submit the enclosed recommendations for publication on the following subjects:

AC 20.128A Design Considerations for Minimizing Hazards Caused by Uncontained Turbine Engine and Auxilary Power Unit Rotor Failure

AC 29.2A Advisory Material for Compliance with Rotor Burst Rule

The enclosed packages are in the form of final draft ACs. The packages were developed by the Powerplant Installation Harmonization Working Group chaired by Bruce Honsberger of Boeing and Wim Overmars of Fokker. The membership of the group is a good balance of interested parties in the U.S. and Europe. This group can be made available if needed for docket review.

The members of ARAC appreciate the opportunity to participate in the FAA rulemaking process and fully endorse these recommendations.

Sincerely,

G.R. Mack

Gerald R. Mack
Assistant Chairman
Transport Airplane & Engine Issues Group
Aviation Rulemaking Advisory Committee
Tele: (206) 234-9570, Fax: 237-0192, Mailstop: 67-UM

Enclosure

cc:	M. Borfitz	(617) 238-7199
	B. Honsberger	67-UW
	S. Miller	(206) 227-1100
	W. Overmars	31-206052895

Draft Advisory Circular

U.S. Department
of Transportation
Federal Aviation
Administration

Subject: **DESIGN CONSIDERATIONS FOR MINIMIZING HAZARDS CAUSED BY UNCONTAINED TURBINE ENGINE AND AUXILIARY POWER UNIT ROTOR FAILURE**

Date: July 18, 1995 AC No. 20-128A
Initiated by: ANM-110

THIS DOCUMENT IS A WORKING DRAFT AND IS NOT FOR PUBLIC RELEASE

1. **PURPOSE.** This advisory circular (AC) sets forth a method of compliance with the requirements of §§ 23.901(f), 23.903(b)(1), 25.901(d) and 25.903(d)(1) of the Federal Aviation Regulations (FAR) pertaining to design precautions taken to minimize the hazards to an airplane in the event of uncontained engine or auxiliary power unit (APU) rotor failures. The guidance provided within this AC was harmonized as of the issuance date with that of the European Joint Aviation Authorities (JAA) and is intended to provide a method of compliance that has been found acceptable. As with all AC material, it is not mandatory and does not constitute a regulation.

2. **CANCELLATION**. Advisory Circular 20-128, "Design Considerations for Minimizing Hazards Caused by Uncontained Turbine Engine and Auxiliary Power Unit Rotor and Fan Blade Failures," dated March 3, 1988, is cancelled.

3. **APPLICABILITY.** This advisory circular applies to Part 23 and Part 25 airplanes for which a new, amended, or supplemental, type certificate is requested.

4. **RELATED DOCUMENTS.** Sections 23.903, and 25.903 of the FAR, as amended through Amendment 25-tbd and 23-tbd **(FAA to insert appropriate Amendment levels prior to publication)** respectively, and other sections relating to uncontained engine failures.

a. Related Federal Aviation Regulations. Sections which prescribe requirements for the design, substantiation and certification relating to uncontained engine debris include:

§ 23.863, 25.863	Flammable Fluid Fire Protection
§ 25.365 (e)(1)	Pressurized Compartment Loads

§ 25.571 (a), (e)(2)(3)(4)	Damage Tolerance and Fatigue evaluation of structure.
§ 25.963 (e)	Equipment, systems and installations
§ 25.1189	Shutoff means.

b. Advisory Circulars (AC's) and Users Manual.

AC 25-8	Auxiliary Fuel System Installations
AC 23-10	Auxiliary Fuel System Installations
AC 20-135	Powerplant Installation and Propulsion System Component Fire Protection Test Methods, Standards, and Criteria (or the equivalent International Standard Order 2685)
AC 25-571	Damage Tolerance and Fatigue Evaluation of Structure
Users Manual	Users Manual for AC20-128A, "Uncontained Engine Failure Risk Analysis Methodology", dated tbd.

Advisory Circulars and the Users Manual can be obtained from the U.S. Department of Transportation, M-443.2, Subsequent Distribution Unit, Washington, D.C. 20590.

c. Technical Standard Orders (TSO's).

TSO C77a (or JAR APU)	Gas Turbine Auxiliary Power Units

Technical Standard Orders can be obtained from the Federal Aviation Administration (FAA), Aircraft Certification Service, Aircraft Engineering Division, Technical Analysis Branch (AIR-120), 800 Independence Ave. S.W., Washington, DC, 205921.

d. Society of Automotive Engineers (SAE) Documents.

AIR1537	Report on Aircraft Engine Containment, dated October, 1977.
AIR4003	Uncontained turbine Rotor Events Data Period 1976 through 1983.
AIR4770 Draft	Uncontained turbine Rotor Events Data Period 1984 through 1989.

These documents can be obtained from the Society of Automotive Engineers, Inc., 400 Commonwealth Drive, Warrendale, Pennsylvania, 15096.

5. BACKGROUND. Although turbine engine and APU manufacturers are making efforts to reduce the probability of uncontained rotor failures, service experience shows that uncontained compressor and turbine rotor failures continue to occur. Turbine engine failures have resulted in

high velocity fragment penetration of adjacent structures, fuel tanks, fuselage, system components and other engines of the airplane. While APU uncontained rotor failures do occur and to date the impact damage to the airplane has been minimal, some rotor failures do produce fragments that should be considered.. Since it is unlikely that uncontained rotor failures can be completely eliminated, Parts 23 and 25 require that airplane design precautions be taken to minimize the hazard from such events.

---

a. Uncontained gas turbine engine rotor failure statistics are presented in the Society of Automotive Engineers (SAE) reports covering time periods and number of uncontained events listed in the table shown below. The following statistics summarize the service experience for fixed wing airplanes and do not include data for rotorcraft and APU's:

			No. of Events	
Report No.	Period	Total	Category 3	Category 4
AIR1537	1962-75	275	44	5
AIR4003	1976-83	237	27	3
AIR4770 (Draft)	1984-89	164	22	7
TOTAL		676	93	15

The total of 676 uncontained events includes 93 events in the Category 3 and 15 events in Category 4 damage to the airplane. Category 3 damage is defined as significant airplane damage with the airplane continuing flight and making a safe landing. Category 4 damage is defined as severe airplane damage involving a crash landing, critical injuries, fatalities or hull loss.

During this 28 year period there were 1,089.6 million engine operating hours on commercial transports. The events were caused by a wide variety of influences classed as Environmental (bird ingestion, corrosion/erosion, foreign object damage (FOD)), Manufacturing and Material Defects, Mechanical, and Human Factors (maintenance and overhaul, inspection error and operational procedures).

b. Uncontained APU rotor failure statistics covering 1962 through 1993 indicate that there have been several uncontained failures in at least 250 million hours of operation on transport category airplanes. No category 3 or 4 events were reported and all failures occurred during ground operation. These events were caused by a wide variety of influences such as corrosion, ingestion of deicing fluid, manufacturing and material defects, mechanical, and human factors (maintenance and overhaul, inspection error and operational procedures).

c. The statistics in the SAE studies indicate the existence of many different causes of failures not readily apparent or predictable by failure analysis methods. Because of the variety of causes of uncontained rotor failures, it is difficult to anticipate all possible causes of failure and to provide protection to all areas. However, design considerations outlined in this AC provide guidelines for achieving the desired objective of minimizing the hazard to an airplane from uncontained rotor failures. These guidelines, therefore, assume a rotor failure will occur and that

analysis of the effects of this failure is necessary. These guidelines are based on service experience and tests but are not necessarily the only means available to the designer.

6. DEFINITIONS.

a. Rotor. Rotor means the rotating components of the engine and APU that analysis, test, and/or experience has shown can be released during uncontained failure. The engine or APU manufacturer should define those components that constitute the rotor for each engine and APU type design. Typically rotors have included, as a minimum, disks, hubs, drums, seals, impellers, blades and spacers.

b. Blade. The airfoil sections (excluding platform and root) of the fan, compressor and turbine.

c. Uncontained Failure. For the purpose of airplane evaluations in accordance with this AC, uncontained failure of a turbine engine is any failure which results in the escape of rotor fragments from the engine or APU that could result in a hazard. Rotor failures which are of concern are those where released fragments have sufficient energy to create a hazard to the airplane.

d. Critical Component. A critical component is any component whose failure would contribute to or cause a failure condition which would prevent the continued safe flight and landing of the airplane. These components should be considered on an individual basis and in relation to other components which could be damaged by the same fragment or by other fragments from the same uncontained event .

e. Continued Safe Flight and Landing. Continued safe flight and landing means that the airplane is capable of continued controlled flight and landing, possibly using emergency procedures and without exceptional pilot skill or strength, with conditions of considerably increased flight crew workload and degraded flight characteristics of the airplane,

f. Fragment Spread Angle. The fragment spread angle is the angle measured, fore and aft from the center of the plane of rotation of an individual rotor stage, initiating at the engine or APU shaft centerline (see Figure 1).

g. Impact Area. The impact area is that area of the airplane likely to be impacted by uncontained fragments generated during a rotor failure (see Paragraph 9).

h. Engine and APU Failure Model. A model describing the size, mass, spread angle, energy level and number of engine or APU rotor fragments to be considered when analyzing the airplane design is presented in Paragraph 9.

7. DESIGN CONSIDERATIONS. Practical design precautions should be used to minimize the damage that can be caused by uncontained engine and APU rotor fragments. The most effective methods for minimizing the hazards from uncontained rotor fragments include location

of critical components outside the fragment impact areas or separation, isolation, redundancy, and shielding of critical airplane components and/or systems . The following design considerations are recommended:

a. Consider the location of the engine and APU rotors relative to critical components, systems or areas of the airplane such as:

(1) Any other engine(s) or an APU that provides an essential function ;

(2) Pressurized sections of the fuselage and other primary structure of the fuselage, wings and empennage;

(3) Pilot compartment area;

(4) Fuel system components, piping and tanks;

(5) Control systems, such as primary and secondary flight controls, electrical power cables, wiring, hydraulic systems, engine control systems, flammable fluid shut-off valves, and the associated actuation wiring or cables;

(6) Any fire extinguisher system of a cargo compartment, an APU, or another engine including electrical wiring and fire extinguishing agent plumbing to these systems;

(7) Engine air inlet attachments and effects of engine case deformations caused by fan blade debris resulting in attachment failures;

(8) Instrumentation essential for continued safe flight and landing;

(9) Thrust reverser systems where inadvertent deployment could be catastrophic; and

(10) Oxygen systems for high altitude airplanes, where these are critical due to descent time.

b. Location of Critical Systems and Components. Critical airplane flight and engine control cables, wiring, flammable fluid carrying components and lines (including vent lines), hydraulic fluid lines and components, and pneumatic ducts should be located to minimize hazards caused by uncontained rotors and fan blade debris. The following design practices should be considered:

(1) Locate, if possible, critical components or systems outside the likely debris impact areas.

(2) Duplicate and separate critical components or systems, or provide suitable protection if located in debris impact areas.

(3) Protection of critical systems and components can be provided by using airframe structure or supplemental shielding.

These methods have been effective in mitigating the hazards from both single and multiple small fragments within the ± 15 degree impact area. Separation of multiplicated critical systems and components by at least a distance equal to the 1/2 blade fragment dimension has been accepted for showing minimization from a single high energy small fragment when at least one of the related multiplicated critical components is shielded by significant structure such as aluminum lower wing skins, pylons, pressure cabin skins or equivalent structures.

Multiplicated critical systems and components positioned behind less significant structures should be separated by at least a distance equal to the 1/2 blade fragment dimension, and at least one of the multiplicated critical systems should be:

i) located such that equivalent protection is provided by other inherent structures such as pneumatic ducting, interiors, bulkheads, stringers, or

ii) protected by an additional shield such that the airframe structure and shield material provide equivalent shielding.

(4) Locate fluid shutoffs and actuation means so that flammable fluid can be isolated in the event of damage to the system. .

(5) Minimize the flammable fluid spillage which could contact an ignition source.

(6) For airframe structural elements, provide redundant designs or crack stoppers to limit the subsequent tearing which could be caused by uncontained rotor fragments.

(7) Locate fuel tanks and other flammable fluid systems and route lines (including vent lines) behind airplane structure to reduce the hazards from spilled fuel or from tank penetrations. Fuel tank explosion-suppression materials, protective shields or deflectors on the fluid lines, have been used to minimize the damage and hazards.

c. External Shields and Deflectors. When shields, deflection devices or airplane structure are proposed to be used to protect critical systems or components, the adequacy of the protection, including mounting points to the airframe structure, should be shown by testing or validated analyses supported by test data, using the fragment energies supplied by the engine or APU manufacturer or those defined in paragraph 9. For protection against engine small fragments, as defined in paragraph 9, no quantitative validation as defined in paragraph 10 is required if equivalency to the penetration resistant structures listed (e.g. pressure cabin skins, etc.) is shown.

8. ACCEPTED DESIGN PRECAUTIONS. Design practices currently in use by the aviation industry that have been shown to reduce the overall risk, by effectively eliminating certain specific risks and reducing the remaining specific risks to a minimum level, are described within

this paragraph of the AC. Airplane designs submitted for evaluation by the regulatory authorities will be evaluated against these proven design practices.

a. **Uncontrolled Fire.**

(1) Fire Extinguishing Systems. The engine/APU fire extinguishing systems currently in use rely on a fire zone with a fixed compartment air volume and a known air exchange rate to extinguish a fire. The effectiveness of this type of system along with firewall integrity may therefore be compromised for the torn/ruptured compartment of the failed engine/ APU. Protection of the airplane following this type of failure relies on the function of the fire warning system and subsequent fire switch activation to isolate the engine/APU from airframe flammable fluid (fuel and hydraulic fluid) and external ignition sources (pneumatic and electrical). Fire extinguishing protection of such a compromised system may not be effective due to the extent of damage. Continued function of any other engine, APU or cargo compartment fire warning and extinguisher system, including electrical wiring and fire extinguishing agent plumbing, should be considered as described in Paragraph 7.

(2) Flammable Fluid Shutoff Valve. As discussed above, shutoff of flammable fluid supply to the engine may be the only effective means to extinguish a fire following an uncontained failure, therefore the engine isolation/flammable fluid shutoff function should be assured following an uncontained rotor failure. Flammable fluid shutoff valves should be located outside the uncontained rotor impact area. Shutoff actuation controls that need to be routed through the impact area should be redundant and appropriately separated in relation to the one-third disc maximum dimension.

(3) Fire Protection of Critical Functions. Flammable fluid shutoff and other critical controls should be located so that a fire (caused by an uncontained rotor event) will not prevent actuation of the shutoff function or loss of critical aircraft functions. If shutoff or other critical controls are located where a fire is possible following an uncontained rotor failure (e.g. in compartments adjacent to fuel tanks) then these items should meet the applicable fire protection standards such as AC 20-135, "Powerplant Installation and Propulsion System Component Fire Protection Test Methods, Standards, and Criteria" or the equivalent ISO 2685.

(4) Fuel Tanks. If fuel tanks are located in impact areas, then the following precautions should be implemented:

(i) Protection from the effects of fuel leakage should be provided for any fuel tanks located above an engine or APU and within the one-third disc and intermediate fragment impact areas. Dry bays or shielding are acceptable means. The dry bay should be sized based on analysis of possible fragment trajectories through the fuel tank wall and the subsequent fuel leakage from the damaged fuel tank so that fuel will not migrate to an engine, APU or other ignition source during either in flight or ground operation. A minimum drip clearance distance of 10 inches from potential ignition sources of the engine nacelle, for static conditions, has been acceptable (see Figure 5).

(ii) Fuel tank penetration leak paths should be determined and evaluated for hazards during flight and ground phases of operation. If fuel spills into the airstream away from the airplane no additional protection is needed. Additional protection should be considered if fuel could spill, drain or migrate into areas housing ignition sources, such as engine or APU inlets or wheel wells. Damage to adjacent systems, wiring etc., should be evaluated regarding the potential that an uncontained fragment will create both an ignition source and fuel source. Wheel brakes may be considered as an ignition source during takeoff and initial climb. Protection of the wheel wells may be provided by airflow discharging from gaps or openings, preventing entry of fuel, a ventilation rate precluding a combustible mixture or other provisions indicated in §§ 23.863 and 25.863.

(iii) Areas of the airplane where flammable fluid migration is possible that are not drained and vented and have ignition sources or potential ignition sources should be provided with a means of fire detection and suppression and be explosion vented or equivalently protected.

b. Loss of Thrust.

(1) Fuel Reserves. The fuel reserves should be isolatable such that damage from a disc fragment will not result in loss of fuel required to complete the flight or a safe diversion. The effects of fuel loss, and the resultant shift of center of gravity or lateral imbalance, on airplane controllability should also be considered.

(2) Engine Controls. Engine control cables and/or wiring for the remaining powerplants that pass through the impact area should be separated by a distance equal to the maximum dimension of a one-third disc fragment or the maximum extent possible.

(3) Other Engine Damage. Protection of any other engines from some fragments should be provided by locating critical components such as engine accessories essential for proper engine operation (e.g. high pressure fuel lines, engine controls and wiring, etc.), in areas where inherent shielding is provided by the fuselage, engine or nacelle (including thrust reverser) structure (see Paragraph 7).

c. Loss of Airplane Control.

(1) Flight Controls. Elements of the flight control system should be adequately separated or protected so that the release of a single one-third disc fragment will not cause loss of control of the airplane. Where primary flight controls have duplicated (or multiplicated) elements, these elements should be located to prevent all elements being lost as a result of the single one-third disc fragment. Credit for maintaining control of the airplane by the use of trim controls or other means may be obtained, providing evidence shows that these means will enable the pilot to retain control.

(2) Emergency Power. Loss of electrical power to critical functions following an uncontained rotor event should be minimized. The determination of electrical system criticality is dependent upon airplane operations. For example, airplanes approved for Extended Twin

Engine Operations (ETOPS) operations that rely on alternate power sources such as hydraulic motor generators or APUs may be configured with the electrical wiring separated to the maximum extent possible within the one-third disc impact zone.

(3) Hydraulic Supply. Any essential hydraulic system supply that is routed within an impact area should have means to isolate the hydraulic supply required to maintain control of the airplane.

(4) Thrust reverser systems. The effect of an uncontained rotor failure on inadvertent in-flight deployment of each thrust reverser and possible loss of airplane control shall be considered. The impact area for components located on the failed engine may be different from the impact area defined in Paragraph 6. If uncontained failure could cause thrust reverser deployment, the engine manufacturer should be consulted to establish the failure model to be considered. One acceptable method of minimization is to locate reverser restraints such that not all restraints can be made ineffective by the fragments of a single rotor.

d. Passenger and Crew Incapacitation.

(1) Pilot Compartment. The pilot compartment of transport category airplanes should not be located within the ±15 degree spread angle of any engine rotor stage or APU rotor stage that has not been qualified as contained, unless adequate shielding, deflectors or equivalent protection is provided for the rotor stage in accordance with paragraph 7 (c). For other airplanes (such as new Part 23 commuter category airplanes) the pilot compartment area should not be located within the ±5 degree spread angle of any engine rotor stage or APU rotor stage unless adequate shielding, deflectors, or equivalent protection is provided for the rotor stage in accordance with Paragraph 7c of this AC, except for the following:

(i) For derivative Part 23 category airplanes where the engine location has been previously established, the engine location in relation to the pilot compartment need not be changed.

(ii) For noncommuter Part 23 category airplanes satisfactory service experience relative to rotor integrity and containment in similar engine installations may be considered in assessing the acceptability of installing engines in line with the pilot compartment.

(iii) For noncommuter new Part 23 category, airplanes where due to size and/or design considerations the ±5 degree spread angle cannot be adhered to, the pilot compartment/engine location should be analyzed and accepted in accordance with Paragraphs 9 and 10.

(2) Pressure Vessel. For airplanes that are certificated for operation above 41000 ft. the engines should be located such that the pressure cabin cannot be affected by an uncontained one-third or intermediate disc fragment. Alternatively, it may be shown that rapid decompression due to the maximum hole size caused by these fragments and the associated cabin pressure decay rate

will allow an emergency descent without incapacitation of the flightcrew or passengers. A pilot reaction time of 17 seconds for initiation of the emergency decent has been accepted. Where the pressure cabin could be affected by a one-third disc or intermediate fragments, design precautions should be taken to preclude incapacitation of crew and passengers. Examples of design precautions that have been previously accepted are:

(i) Provisions for a second pressure or bleed down bulkhead outside the impact area of a one-third or intermediate disc fragment.

(ii) The affected compartment in between the primary and secondary bulkhead was made inaccessible, by the use of operating limitations, above the minimum altitude where incapacitation could occur due to the above hole size.

(iii) Air supply ducts running through this compartment were provided with nonreturn valves to prevent pressure cabin leakage through damaged ducts.

> NOTE: If a bleed down bulkhead is used it should be shown that the rate of pressure decay and minimum achieved cabin pressure would not incapacitate the crew, and the rate of pressure decay would not preclude a safe emergency descent.

e. Structural Integrity. Installation of tear straps and shear ties within the uncontained fan blade and engine rotor debris zone to prevent catastrophic structural damage has been utilized to address this threat.

9. ENGINE AND APU FAILURE MODEL. The safety analysis recommended in Paragraph 10 should be made using the following engine and APU failure model, unless for the particular engine/APU type concerned, relevant service experience, design data, test results or other evidence justify the use of a different model.

a. Single One-Third Disc fragment. It should be assumed that the one-third disc fragment has the maximum dimension corresponding to one-third of the disc with one-third blade height and a fragment spread angle of ± 3 degrees. Where energy considerations are relevant, the mass should be assumed to be one-third the bladed disc mass and its' energy, the translational energy (i.e., neglecting rotational energy) of the sector traveling at the speed of its' c.g. location as defined in Figure 2.

b. Intermediate Fragment. It should be assumed that the intermediate fragment has a maximum dimension corresponding to one-third of the bladed disc radius and a fragment spread angle of ± 5 degrees. Where energy considerations are relevant, the mass should be assumed to be 1/30 th of the bladed disc mass and its energy the translational energy (neglecting rotational energy) of the piece traveling at rim speed (see Figure 3).

c. Alternative Engine Failure Model. For the purpose of the analysis, as an alternative to the engine failure model of Paragraphs 9(a) and (b), the use of a single one-third piece of disc

having a fragment spread angle ± 5° would be acceptable, provided that the objectives of Paragraph 10(a) are satisfied.

d. Small Fragments. It should be assumed that small fragments (shrapnel) range in size up to a maximum dimension corresponding to the tip half of the blade airfoil (with exception of fan blades) and a fragment spread angle of ± 15 degrees. Service history has shown that aluminum lower wing skins, pylons, and pressure cabin skin and equivalent structures typically resist penetration from all but one of the most energetic of these fragments. The effects of multiple small fragments should also be considered. Penetration of less significant structures such as fairings, empennage, control surfaces and unpressurized skin has typically occurred at the rate of 2 1/2 percent of the number of blades of the failed rotor stage. Refer to paragraph 7(b) and 7(c) for methods of minimization of the hazards. Where the applicant wishes to show compliance by considering the energy required for penetration of structure (or shielding) the engine manufacturer should be consulted for guidance as to the size and energy of small fragments within the impact area.

For APUs, where energy considerations are relevant, it should be assumed that the mass will correspond to the above fragment dimensions and that it has a translational energy level of one percent of the total rotational energy of the original rotor stage.

e. Fan Blade Fragment. It should be assumed that the fan blade fragment has a maximum dimension corresponding to the blade tip with one-third the blade airfoil height and a fragment spread angle of ± 15°. Where energy considerations are relevant the mass should be assumed to be corresponding to the one-third of the airfoil including any part span shroud and the energy the translational energy (neglecting rotational energy) of the fragment traveling at the speed of its c.g. location as defined in Figure 4. As an alternative, the engine manufacturer may be consulted for guidance as to the size and energy of the fragment.

f. Critical Engine Speed. Where energy considerations are relevant the uncontained rotor event should be assumed to occur at the engine or APU shaft red line speed.

g. APU Failure Model. For all APU's, the installer also needs to address any hazard to the airplane associated with APU debris (up to and including a complete rotor where applicable) exiting the tailpipe. Subparagraph (1) or (2) below or applicable service history provided by the APU manufacturer may be used to define the size, mass, and energy of debris exiting that tailpipe. The APU rotor failure model applicable for a particular APU installation is dependent upon the provisions of the Technical Standard Order (TSO) that were utilized for receiving approval:

(1) For APU's where rotor integrity has been demonstrated in accordance with TSO C77a/JAR APU, i.e. without specific containment testing, Paragraphs 9(a), (b), and (d), or Paragraphs 9(c) and 9(d) apply.

(2) For APU rotor stages qualified as contained in accordance with the TSO, historical data shows that in-service uncontained failures have occurred. These failure modes have included bi-

hub, overspeed, and fragments missing the containment ring which are not addressed by the TSO containment test. In order to address these hazards, the installer should use the APU small fragment definition of Paragraph 9d or substantiated in-service data supplied by the APU manufacturer.

10. SAFETY ANALYSIS.

a. Analysis. An analysis should be made using the engine/APU model defined in Paragraph 9 to determine the critical areas of the airplane likely to be damaged by rotor debris and to evaluate the consequences of an uncontained failure. This analysis should be conducted in relation to all normal phases of flight, or portions thereof.

(1) A delay of at least 15 seconds should be assumed for the emergency engine shut down drill. The extent of the delay is dependent upon circumstances resulting from the uncontained failure including increased flight crew workload stemming from multiplicity of warnings which require analysis by the flight crew.

(2) Some degradation of the flight characteristics of the airplane or operation of a system may be permissible, if the ability to complete continued safe flight and landing is provided. Account should be taken of the behavior of the airplane under asymmetrical engine thrust or power conditions together with any possible damage to the flight control system, and of the predicted airplane recovery maneuver.

(3) When considering how or whether to mitigate any potential hazard identified by the model, credit may be given to flight phase, service experience, or other data, as noted in Paragraph 7.

b. Drawings. Drawings should be provided to define the uncontained rotor impact threat relative to the areas of design consideration defined in Paragraphs 7a(1) through (10) showing the trajectory paths of engine and APU debris relative to critical areas. The analysis should include at least the following:

(1) damage to primary structure including the pressure cabin, engine/APU mountings and airframe surfaces. Note: Any structural damage resulting from uncontained rotor debris should be considered catastrophic unless the residual strength and flutter criteria of AC 25.571, paragraph 8(c), and ACJ 25.571 (a) subparagraph 2.7.2 can be met without failure of any part of the structure essential for completion of the flight. In addition, the pressurized compartment loads of § 25.365 (e)(1) (g) must be met.

(2) damage to any other engines (the consequences of subsequent uncontained debris from the other engine(s), need not be considered).

(3) damage to services and equipment essential for safe flight and landing (including indicating and monitoring systems), particularly control systems for flight, engine power, engine fuel supply and shut-off means and fire indication and extinguishing systems.

(4) pilot incapacitance, (see also paragraph 8 (d)(1)).

(5) penetration of the fuel system, where this could result in the release of fuel into personnel compartments or an engine compartment or other regions of the airplane where this could lead to a fire or explosion.

(6) damage to the fuel system, especially tanks, resulting in the release of a large quantity of fuel.

(7) Penetration and distortion of firewalls and cowling permitting a spread of fire.

(8) Damage to or inadvertent movement of aerodynamic surfaces (e.g.. flaps, slats, stabilizers, ailerons, spoilers, thrust reversers, elevators, rudders, strakes, winglets, etc.) and the resultant effect on safe flight and landing.

c. Safety Analysis Objectives. It is considered that the objective of minimizing hazards will have been met if:

(1) The practical design considerations and precautions of Paragraphs 7 and 8 have been taken;

(2) The safety analysis has been completed using the engine/APU model defined in paragraph 9;

(3) For Part 25 transport and Part 23 commuter category airplanes, the following hazard ratio guidelines have been achieved:

(i) Single One-Third Disc Fragment. There is not more than a 1 in 20 chance of catastrophe resulting from the release of a single one-third disc fragment as defined in Paragraph 9a.

(ii) Intermediate Fragment. There is not more than a 1 in 40 chance of catastrophe resulting from the release of a piece of debris as defined in Paragraph 9.

(iii) Multiple Disc Fragments. (Only applicable to any duplicated or multiplicated system where all of the system channels contributing to its function have some part which is within a distance equal to the diameter of the largest bladed rotor, measured from the engine centerline). There is not more than 1 in 10 chance of catastrophe resulting from the release in three random directions of three one-third fragments of a disc each having a uniform probability of ejection over the 360° (assuming an angular spread of ±3° relative to the plane of the disc) causing coincidental damage to systems which are duplicated or multiplicated.

NOTE: Where dissimilar systems can be used to carry out the same function (e.g. elevator control and pitch trim), they should be regarded as duplicated (or

Multiplicated) systems for the purpose of this subparagraph provided control can be maintained .

NOTE: The numerical assessments described above may be used to judge the relative values of minimization. The degree of minimization that is feasible may vary depending upon airplane size and configuration and this variation may prevent the specific hazard ratio from being achieved. These levels are design goals and should not be treated as absolute targets. It is possible that any one of these levels may not be practical to achieve.

(4) For new non-commuter Part 23 airplanes the chance of catastrophe is not more than twice that of 10 (c)(3)(i), (ii) and (iii) for each of these fragment types.

(5) A numerical risk assessment is not requested for the single fan blade fragment, small fragments, and APU and engine rotor stages which are qualified as contained.

d. APU Analysis For APU's that are located where no hazardous consequences would result from an uncontained failure, a limited qualitative assessment showing the relative location of critical systems/components and APU impact areas is all that is needed. If critical systems/components are located within the impact area, more extensive analysis is needed. For APU's which have demonstrated rotor integrity only, the failure model outlined in Paragraph 9g(1) should be considered as a basis for this safety assessment. For APU rotor stages qualified as contained per the TSO, the airplane safety analysis may be limited to an assessment of the effects of the failure model outlined in Paragraph 9g(2).

e. Specific Risk The airplane risk levels specified in Paragraph 10c, resulting from the release of rotor fragments, are the mean values obtained by averaging those for all rotor on all engines of the airplane, assuming a typical flight. Individual rotors or engines need not meet these risk levels nor need these risk levels be met for each phase of flight if either--

(1) No rotor stage shows a higher level of risk averaged throughout the flight greater than twice those stated in Paragraph 10c.

NOTE: The purpose of this Paragraph is to ensure that a fault which results in repeated failures of any particular rotor stage design, would have only a limited effect on airplane safety.

(2) Where failures would be catastrophic in particular portions of flight, allowance is made for this on the basis of conservative assumptions as to the proportion of failures likely to occur in these phases. A greater level of risk could be accepted if the exposure exists only during a particular phase of flight e.g., during takeoff. The proportional risk of engine failure during the particular phases of flight is given in SAE Papers referenced in paragraph 4 (d). See also data contained in the CAA paper "Engine Non-Containments - The CAA View", which includes Figure 6. This paper is published in NASA Report CP-2017, "An Assessment of Technology for Turbo-jet Engine Rotor Failures", dated August 1977.

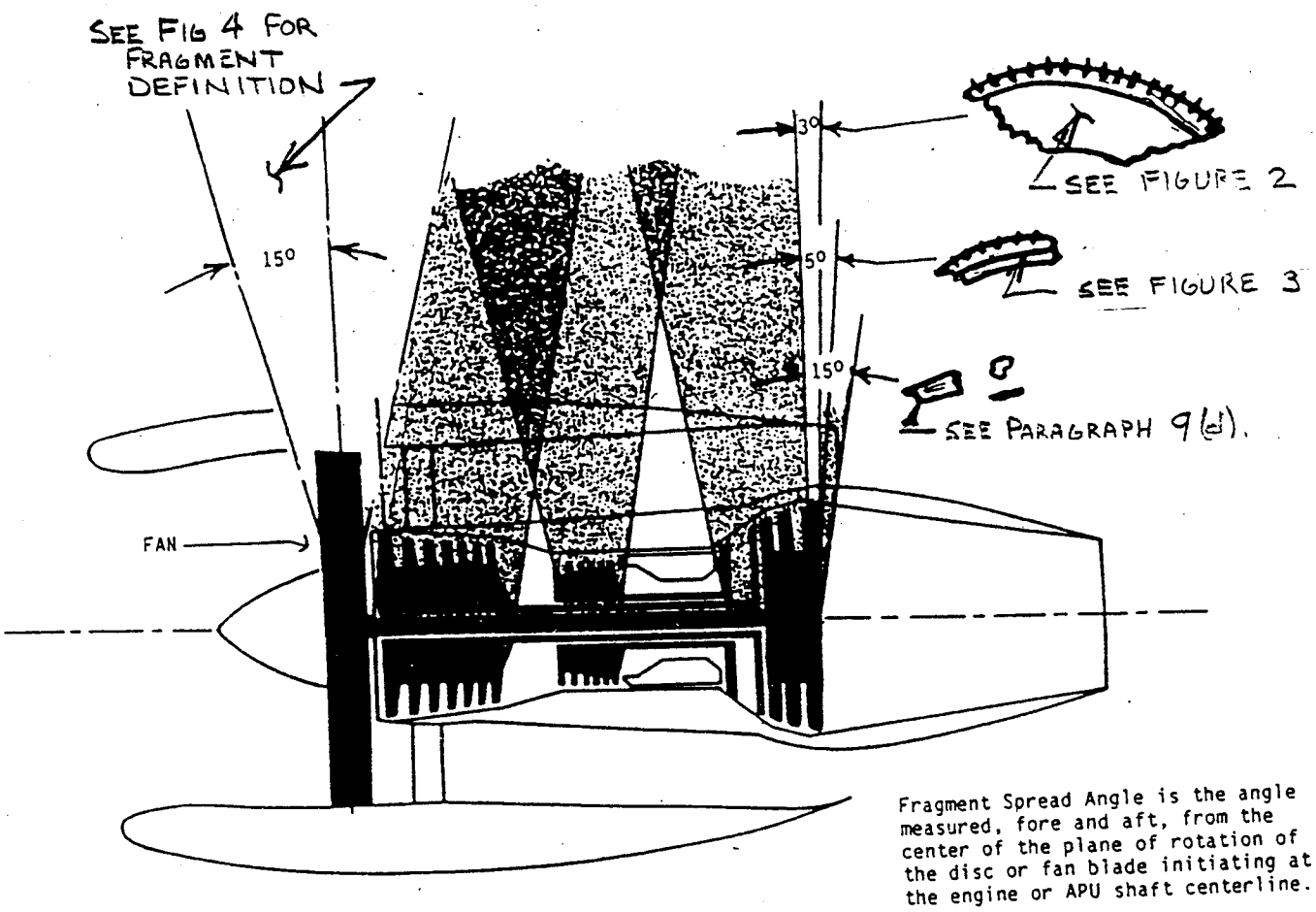

FIGURE 1
ESTIMATED PATH OF FRAGMENTS

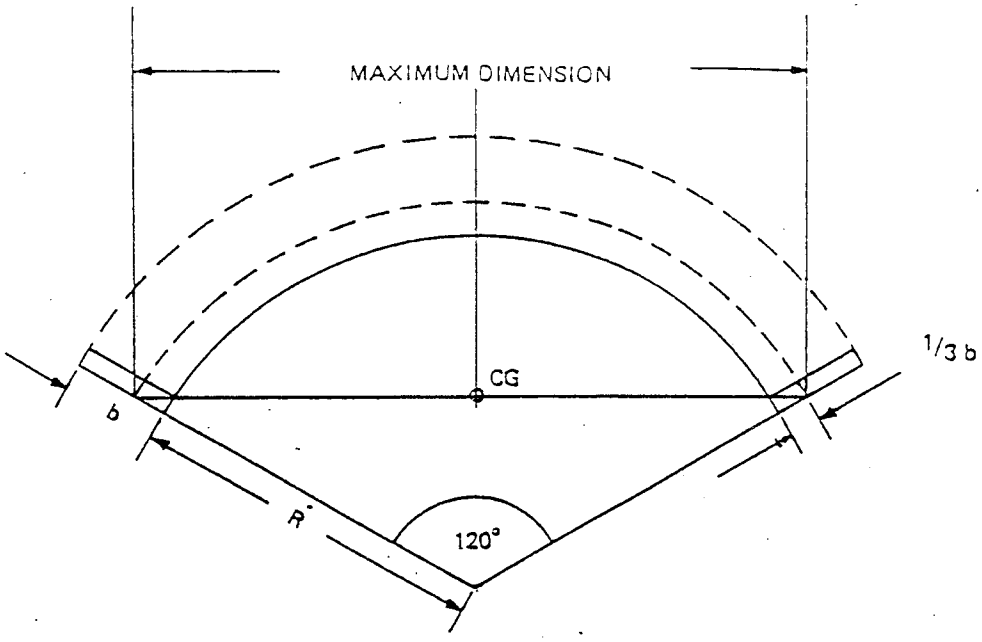

Where R = disc radius
b = blade length

The CG is taken to lie on the maximum dimension as shown.

FIGURE 2 - SINGLE ONE-THIRD ROTOR FRAGMENT

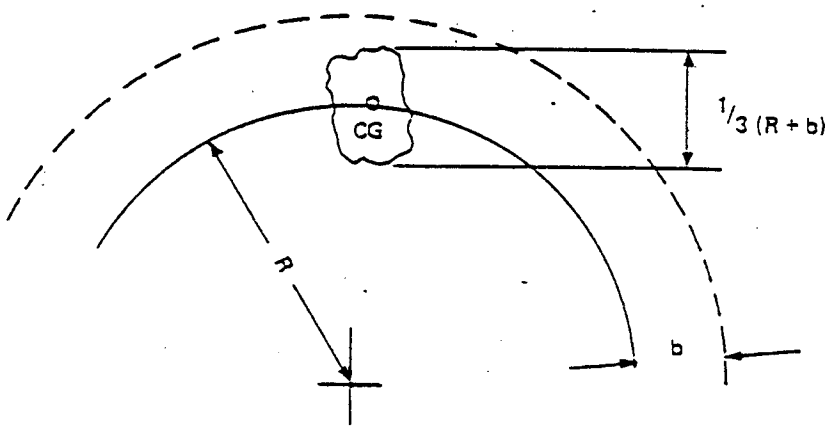

Where R = disc radius
b = blade length

Maximum dimension = ⅓ (R + b)

Mass assumed to be 1/30th of bladed disc

CG is taken to lie on the disc rim

FIGURE 3 - INTERMEDIATE FRAGMENT

FIGURE 4
FAN BLADE FRAGMENT DEFINITION

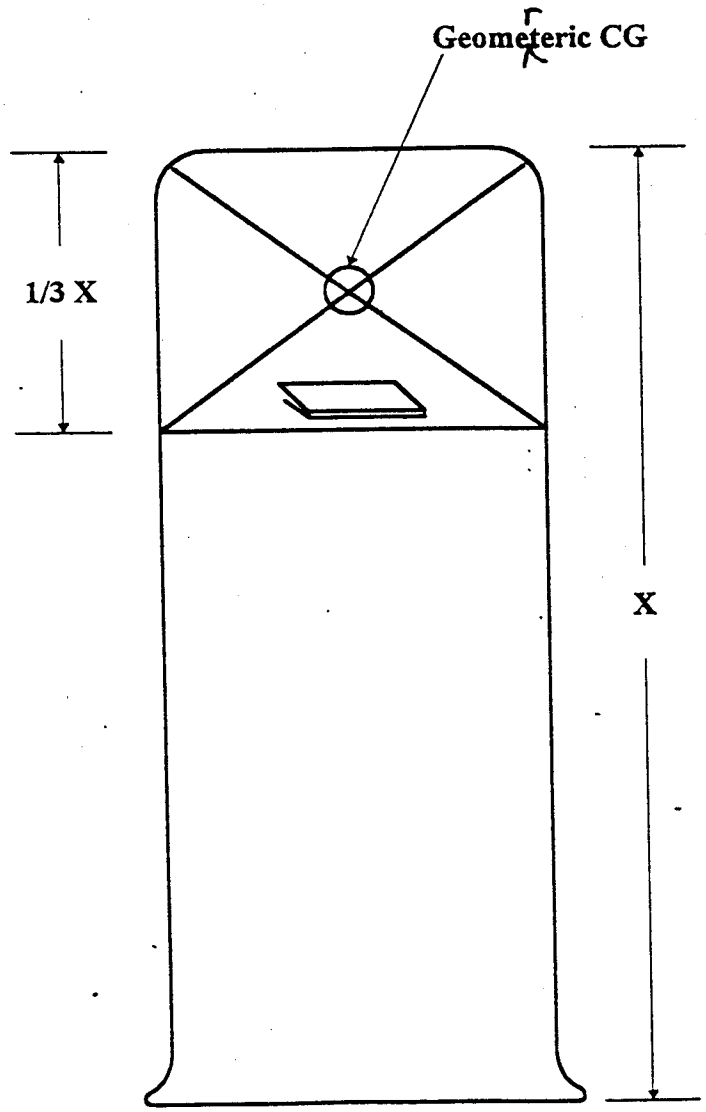

Where X = Airfoil Length (less blade root & platform)

CG is taken to lie at the centerline of the 1/3 fragment

Fragment velocity taken at geometric CG

Fragment mass assumed to be 1/3 of the airfoil mass

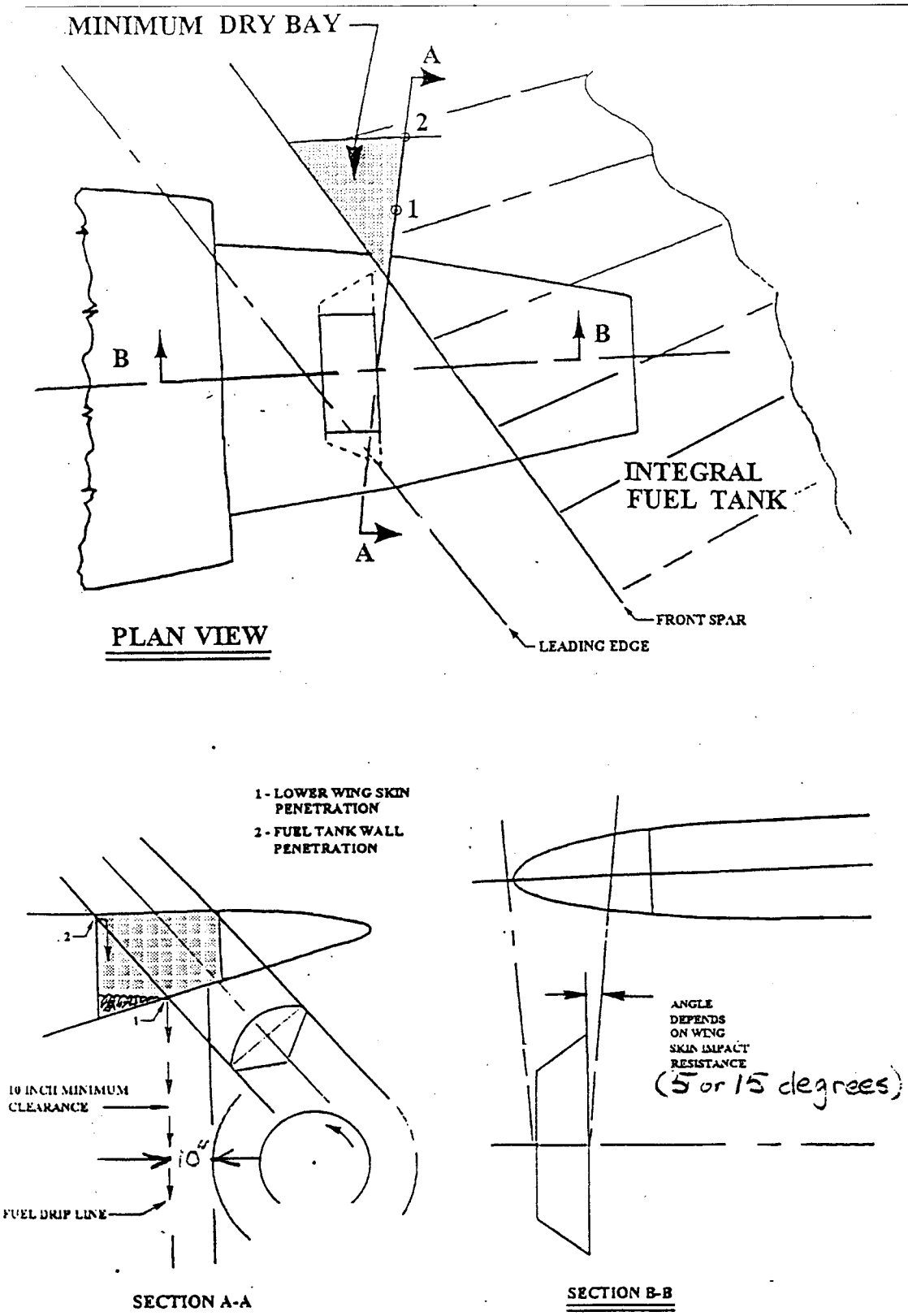

FIGURE 5- DRY BAY SIZING DETERMINATION EXAMPLE

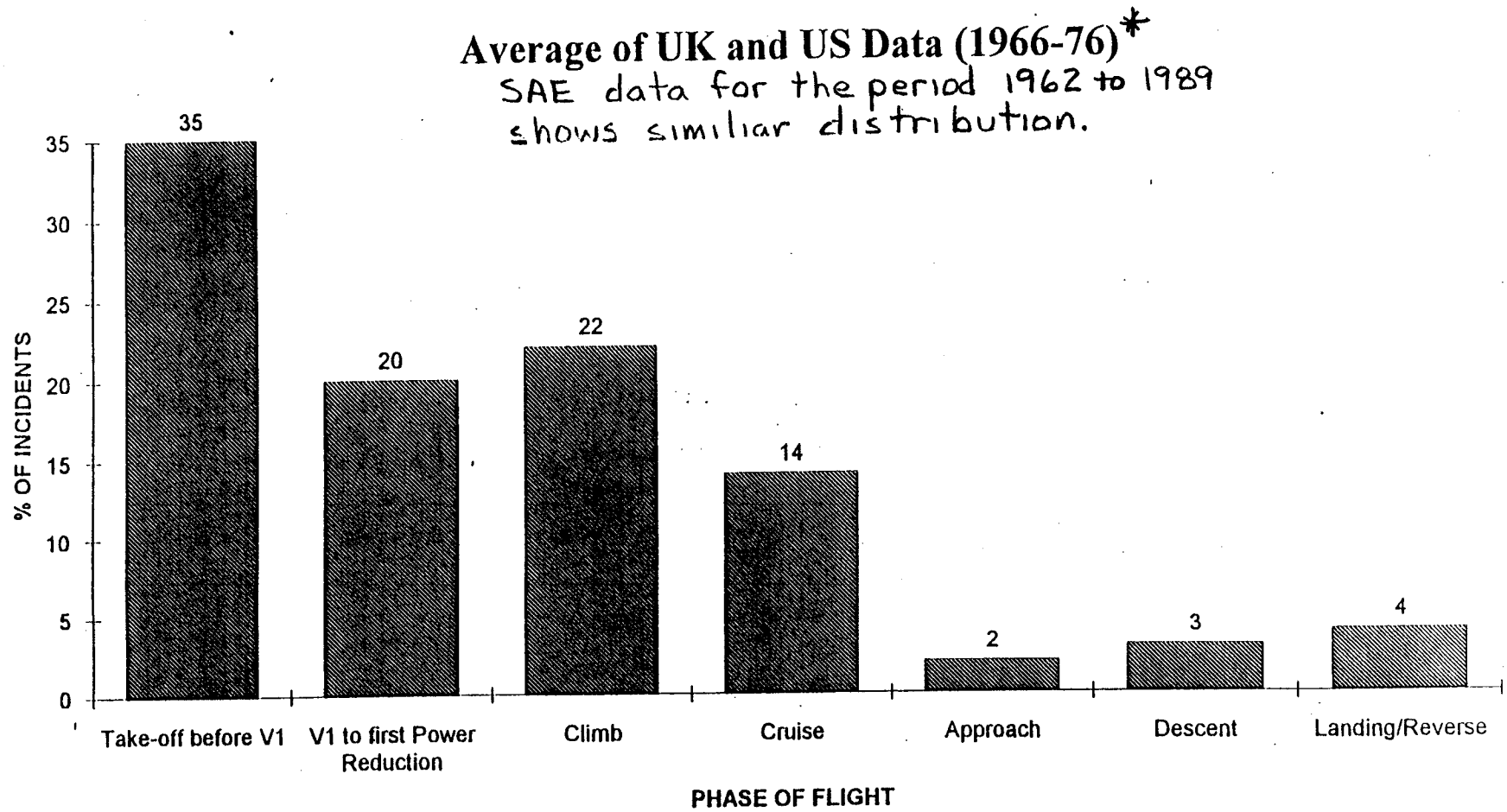

FIGURE 6 - ALL NON-CONTAINMENTS BY PHASE OF FLIGHT

Draft no. 8

April 18, 1995

Advisory Material for Compliance with Rotor Burst Rule (Appendix to AC 29-2A)

DRAFT

NOT FOR PUBLICATION

1. **PURPOSE**. This advisory material sets forth a method of compliance with the requirements of 29.901, 29.903(b)(1), and 29.903(d)(1) of the Federal Aviation Regulations (FAR) pertaining to design precautions taken to minimize the hazards to rotorcraft in the event of uncontained engine rotor (compressor and turbine) failure. It is for guidance and to provide a method of compliance that has been found acceptable. As with all AC material, it is not mandatory and does not constitute a regulation.

2. **RELATED FAR/JAR SECTIONS**. Sections 29.901(c) and 29.903(d)(1) of the FAR/JAR.

3. **BACKGROUND**. Although turbine engine manufacturers are making efforts to reduce the probability of uncontained rotor failures, service experience shows that such failures continue to occur. Failures have resulted in high velocity fragment penetration of fuel tanks, adjacent structures, fuselage, system components and other engines of the rotorcraft. Since it is unlikely that uncontained rotor failures can be completely eliminated, rotorcraft design precautions should be taken to minimize the hazard from such

events. These design precautions should recognize rotorcraft design features that may differ significantly from that of an airplane, particularly regarding an engine location and its proximity to another engine, systems and components.

A. Uncontained gas turbine engine rotor failure statistics for rotorcraft are presented in the Society of Automotive Engineers (SAE) Reports no. AIR 4003 (period 1976-83) and AIR 4770 (period 1984-89).

B. The statistics in the SAE studies indicate the existence of some failure modes not readily apparent or predictable by failure analysis methods. Because of the variety of uncontained rotor failures, it is difficult to analyze all possible failure modes and to provide protection to all areas. However, design considerations outlined in this AC provide guidelines for achieving the desired objective of minimizing the hazard to rotorcraft from uncontained rotor failures. These guidelines, therefore, assume a rotor failure will occur and that analysis of the effects or evaluation of this failure is necessary. These guidelines are based on service experience and tests but are not necessarily the only means available to the designer.

4. DEFINITIONS

A. **Minimize** Means to reduce to a minimum, decrease to the least possible amount, that can be shown to be both technically feasible and economically justifiable to the certification authority.

B. **Separation**. Positioning of redundant critical structure, systems, or system components within the impact area such that the distance between the components minimizes the potential impact hazard. Redundant critical components should be separated within the spread angles of a rotor by a distance at least equal to either a 1/2 unbladed disk (hub, impeller) sector, or a 1/3 bladed disk (hub, impeller) sector with 1/3 blade height, with each rotating about its c.g., whichever is greater (see Figure 6).

C. **Isolation**. A means to limit system damage so as to maintain partial or full system function after the system has been damaged by fragments. Limiting the loss of hydraulic fluid by the use of check valves to retain the capability to operate flight controls is an example of "isolation." System damage is confined allowing the retention of critical system functions.

D. Rotor. Rotor means the rotating components of the engine and APU that analysis, test, and/or experience has shown can be released during uncontained failure with sufficient energy to hazard the rotorcraft.

The engine or APU manufacturer should define those components that constitute the rotor for each engine and APU type design. Typical rotors have included, as a minimum, disks, hubs, drums, seals, impellers, and spacers.

E. Uncontained Engine or APU Failure (or Rotorburst). For the purposes of rotorcraft evaluations in accordance with this AC, uncontained failure of a turbine engine is any failure which results in the escape of rotor fragments from the engine or APU that could create a hazard to the rotorcraft. Rotor failures which are of concern are those where released fragments have sufficient energy to create a hazard to the rotorcraft. Uncontained failures of APU's which are "ground operable only" are not considered hazardous to the rotorcraft.

F. Critical Component (System). A critical component is any component or system whose failure or malfunction would contribute to or cause a failure condition that

would prevent the continued safe flight and landing of the rotorcraft. These components (systems) should be considered on an individual basis and in relation to other components (systems) that could be degraded or rendered inoperative by the same fragment or by other fragments during any uncontained failure event.

G. **Fragment Spread Angle**. The fragment spread angle is the angle measured, fore and aft, from the center of the plane of rotation of the disk (hub, impeller) or other rotor component initiating at the engine or APU shaft centerline or axis of rotation (see figure 1). The width of the fragment should be considered in defining the path of the fragment envelope's maximum dimension.

H. **Ignition Source**. Any component that could precipitate a fire or explosion. This includes existing ignition sources and potential ignition sources due to damage or fault from an uncontained rotor failure. Potential ignition sources include hot fragments, damage or faults that produce sparking, arcing, or overheating above the auto-ignition temperature of the fuel. Existing ignition sources include items such as unprotected engine or APU surfaces with temperature greater than the auto-ignition temperature of the fuel or any other flammable fluid.

5. SAFETY ASSESSMENT

A. **Procedure** - Assess the potential hazard to the rotorcraft using the following procedure:

(1) **Minimizing Rotor Burst Hazard**. The rotorburst hazard should be reduced to the lowest level that can be shown to be both technically feasible and economically justifiable. The extent of minimization that is possible will vary from new or amended certification projects and from design to design. Thus the effort to minimize must be determined uniquely for each certification project. Design precautions and techniques such as location, separation, isolation, redundancy, shielding, containment and/or other appropriate considerations should be employed, documented, agreed to by the certifying authority, and placed in the type data file. A discussion of these methods and techniques follows.

(2) **Geometric Layout and Safety Analysis**. The applicant should prepare a preliminary geometric layout and safety analysis for a minimum rotorburst

hazard configuration determination early in the design process and present the results to the certification authority no later than when the initial design is complete. Early contact and coordination with the certifying authority will minimize the need for design modification later in the certification process. The hazard analysis should follow the guidelines indicated in paragraph 397c(2) of AC 29-2A and 5.F. of this document. Geometric layouts and analysis should be used to evaluate and identify engine rotorburst hazards to critical systems, powerplants, and structural components from uncontained rotor fragments, and to determine any actions which may be necessary to further minimize the hazard. Calculated geometric risk quantities may be used in accordance with paragraph D following, to define the rotorcraft configuration with the minimum physical rotorburst hazard.

B. **Engine and APU Failure Model**. The safety analysis should be made using the following engine and APU failure model, unless for the particular engine/APU type concerned, relevant service experience, design data, test results or other evidence justify the use of a different model. In particular, a suitable failure

model may be provided by the engine/APU manufacturer. This may show that one or more of the considerations below do not need to be addressed.

(1) **Single One-Third Disc Fragment**. It should be assumed that the one-third disc fragment has the maximum dimension corresponding to one-third of the disc with one-third blade height and a fragment spread angle of $\pm 3°$. Where energy considerations are relevant, the mass should be assumed to be one-third the bladed disc mass and its energy-the translational energy (i.e. neglecting rotational energy) of the sector (see Figure 2).

(2) **Intermediate Fragments**. It should be assumed that the intermediate fragment has a maximum dimension corresponding to one-third of the disc radius with one-third blade height and a fragment spread angle of $\pm 5°$. Where energy considerations are relevant, the mass should be assumed to be 1/30th of the bladed disc mass and its energy the translational energy (neglecting rotational energy) of the piece traveling at rim speed (see Figure 3).

(3) **Alternative Engine Failure Model**. For the purpose of the analysis, as an alternative to the

engine failure model of section (1) and (2) above, the use of a single one-third piece of disc having a fragment spread angle of $\pm 5^\circ$ would be acceptable, provided that the objectives of the analysis are satisfied.

(4) **Small Fragments**. It should be assumed that small fragments have a maximum dimension corresponding to the tip half of the blade airfoil and a fragment spread angle of $\pm 15^\circ$. Where energy considerations are relevant the mass should be assumed to be corresponding to the above fragment dimensions and the energy is the translational energy (neglecting rotational energy) of the fragment travelling at the speed of its c.g. location. The effects of multiple small fragments should be considered during this assessment.

(5) **Critical Engine Speed**. Where energy considerations are relevant the uncontained rotor event should be assumed to occur at the engine shaft speed for the maximum rating appropriate to the flight phase (exclusive of OEI ratings), unless the most probable mode of failure would be expected to result in the engine rotor reaching a red line speed or a design burst speed. For APU's,

use the maximum rating appropriate to the flight phase or the speed resulting from a failure of any one of the normal engine control systems.

(6) **APU Failure Model:** Service experience has shown that some APU rotor failures produced fragments having significant energy have been expelled through the APU tailpipe. For the analysis, the applicable APU service history and test results should be considered in addition to the failure model as discussed in paragraph 5 (b) above for certification of APU installations near critical items. In addition, the APU installer needs to address the rotorcraft hazard associated with APU debris exiting the tailpipe. Applicable service history or test results provided by the APU manufacturer may be used to define the tailpipe debris size, mass, and energy. The uncontained APU rotor failure model is dependent upon the design/analysis, test and service experience.

(a) For APU's where rotor containment has been demonstrated in accordance with TSO C77a/JAR APU, i.e. without specific containment testing. Paragraphs 5.(B)(1), 5.(B)(2) and 5.(B)(4) or Paragraph 5.(B)(3) and 5.(B)(4) apply. If shielding of critical airframe components is

proposed, the energy level that should be considered is that of the tri-hub failure released at the critical speed as defined in Paragraph 5.(B)(5). The shield and airframe mounting point(s) should be shown to be effective at containing both primary and secondary debris at angles specified by the failure model.

(b) For APU rotor stages qualified as contained in accordance with the TSO, an objective review of the APU location should be made to ensure the hazard is minimized in the event of an uncontained APU rotor failure. Historical data shows that in-service uncontained failures have occurred on APU rotor stages qualified as contained per the TSO. These failure modes have included bi-hub and overspeed failure resulting in some fragments missing the containment ring. In order to address these hazards, the installer should use the small fragment failure model, or substantiated in-service data supplied by the APU manufacture . Analytical substantiation for the shielding system if proposed is acceptable for showing compliance.

C. <u>Engine/APU Rotorburst Data</u>. The engine or APU manufacturer should provide the required engine data to

accomplish the evaluation and analysis necessary to minimize the rotorburst hazard such as:

1. engine failure model (range of fragment sizes, spread angles and energy)
2. engine rotorburst probability assessment
3 list of components constituting the rotors

D. **Fragment Impact Risks**. FAA research and development studies have shown that, for rotorcraft conventional configurations (one main rotor and one tail rotor), the main and tail rotorblades have minimal risks from a rotorburst, and thus, they require no special protection. However, unique main and tail rotor blade configurations should be carefully reviewed. Certain zones of the tail rotor drive shaft and other critical parts which may be necessary for continued safe flight and landing may not have natural, minimal risk from uncontained rotor fragments.

E. **Engine Service History/Design**. For the purpose of a gross assessment of the vulnerability of the rotorcraft to an uncontained rotor burst, it must be taken that an uncontained engine rotor failure (burst) will occur. However, in determining the overall risk to the rotorcraft, engine service history and engine design

features should be included in showing compliance with 29.903 to minimize the hazard from uncontained rotor failures. This is extremely important since the engine design and/or the service history may provide valuable information in assessing the potential for a rotor burst occurring and this should be considered in the overall safety analysis.

Information contained in the recent SAE studies (see paragraph 3.A.) should be considered in this evaluation.

F. **Certification Data File**. A report, including all geometric layouts, that details all the aspects of minimizing the engine rotorburst hazards to the rotorcraft should be prepared by the applicant and submitted to the certification authority. Items which should be included in this report are the identification of all hazardous failures that could result from engine rotor failure strikes and their consequences (i.e., an FMEA or equivalent analysis) and the design precautions and features taken to minimize the identified hazards that could result from rotor failure fragment strikes. Thus an analysis that lists all the critical components; quantifies and ranks their associated rotorburst hazard; and clearly show the minimization of that quantified, ranked hazard to the "maximum practicable extent" should

be generated and agreed upon during certification. Critical components should all be identified and their rotorburst hazard quantified, ranked, and minimized where necessary. Design features in which the design precautions of this guidance material are not accomplished should be identified along with the alternate means used to minimize the hazard. To adequately address minimizing the hazards, all rotorcraft design disciplines should be involved in the applicant's compliance efforts and report preparation.

6. **DESIGN CONSIDERATIONS**. Practical design precautions should be used to minimize the damage that can be caused by uncontained engine and APU rotor debris. The following design considerations are recommended:

A. **Consider the location of the engine and APU rotors relative** to critical components, or areas of the rotorcraft such as:

(1) **Opposite Engine** - Protection of the opposite engine from damage from 1/3 disc rotor fragments may not be feasible. Protection of the opposite engine from other fragments may be provided by locating critical components, such as engine

accessories essential for proper engine operation (e.g. high pressure fuel lines, engine controls and wiring, etc.), in areas where inherent shielding is provided by the fuselage, engine, or other structure.

(2) **Engine Controls** - Controls for the remaining engine(s) that pass through the uncontained engine failure zone should be separated/protected to the maximum extent practicable.

(3) Primary structure of the fuselage

(4) Flight crew - The flight crew is considered a critical component.

(5) Fuel system components, piping and tanks including fuel tank access panels (NOTE: Spilled fuel into the engine or APU compartments, on engine cases or on other critical components or areas could create a fire hazard.)

(6) Critical control systems, such as primary and secondary flight controls, electrical power cables, systems and wiring, hydraulic systems, engines

control systems, flammable fluid shut-off valves, and the associated actuation wiring or cables

(7) Engine and APU fire extinguisher systems including electrical wiring and fire extinguishing agent plumbing to engine and APU compartments

(8) Instrumentation necessary for continued safe flight and landing

(9) Transmission and rotor drive shafts

B. **Location of Critical Systems and Components.**

The following design practices have been used to minimize hazards to critical components:

(1) Locate, if possible, critical components or systems outside the likely debris impact areas.

(2) Duplicate and separate critical components or systems if located in debris impact areas or provide suitable protection.

(3) Protection of critical systems and components can be provided by using airframe structure where shown to be suitable.

(4) Locate fluid shutoffs so that flammable fluids can be isolated in the event of damage to the system. Design and locate the shut-off actuation means in protected areas or outside debris impact areas.

(5) Minimize the flammable fluid spillage which could contact an ignition source.

(6) For airframe structural elements, provide redundant designs or crack stoppers to limit the subsequent tearing which could be caused by uncontained rotor fragments.

(7) Consider the likely damage caused by multiple fragments.

(8) Fuel tanks should not be located in impact areas. However, if necessitated by the basic configuration requirements of the rotorcraft type to locate fuel tanks in impact areas, then the engine rotorburst hazard should be minimized by use of design features such as minimization of hazardous fuel spillage (that could contact an ignition source by drainage or migration); by

drainage of leaked fuel quickly and safely into the airstream; by proper ventilation of potential spillage areas; by use of shielding; by use of explosion suppression devices (i.e., explosion resistant foam or inert gases); and by minimization of potential fuel ignition sources or by other methods to reduce the hazard.

(9) The rotor integrity or containment capability demonstrated during APU evaluation to TSO-C77a, or JAR-APU should be considered for installation certification.

(10) The flight data recorder, cockpit voice recorder and emergency locator transmitter, if required, should be located outside the impact zone when practical.

(11) Items such as human factors, pilot reaction time, and correct critical system status indication in the pilot compartment after an uncontained engine failure has occurred should be considered in design to permit continued safe flight and landing.

C. <u>Rotorcraft Modifications</u>. Modifications made to rotorcraft certified to this rule should be assessed

with the considerations of this AC. These modifications include but are not limited to re-engining installations (including conversion from reciprocating to turbine powered), APU installations, fuselage stretch, and auxiliary fuel tank installations. Auxiliary fuel tank(s) should be located as much as practical so as to minimize the risk that this tank(s) will be hit by rotor failure fragments. The need to remain within the approved C.G. limits of the aircraft will of necessity limit the degree to which the risk may be minimized.

7. **PROTECTIVE MEASURES**. The following list is provided for consideration as some measures which may be used to minimize effects of a rotor burst:

A. Powerplant Containment

(1) **Engine Rotor Fragment Containment**. **It should be clearly understood that containment of rotor fragments is not a requirement**. However, it is one of many options which may be used to minimize the hazards of an engine rotor burst. Containment structures (either around the engine, or APU, or on the rotorcraft) that have been demonstrated to provide containment should be accepted as minimizing the hazard defined by the rotor

failure model for that particular rotor component. Contained rotor in-service failures may be used to augment any design or test data. Containment material stretch and geometric deformation should be considered in conjunction with fragment energies and trajectories in defining the hazards to adjacent critical components such as structures, system components, fluid lines, and control systems. Data obtained during containment system testing along with analytical data and service experience should be used for this evaluation.

(2) **APU Containment**

Rotor integrity or containment capability demonstrated during APU TSO evaluation should be considered for installation certification. If rotor containment option was shown by analysis or rig test, an objective review of the APU location should be made to ensure the hazard is minimized in the event of an uncontained APU rotor failure.

B. **Shields and Deflectors**. When shields, deflection devices, or intervening rotorcraft structure are used to protect critical systems or components, the adequacy of the protection should be shown by testing or analysis supported by test data, using the impact area, fragment mass, and fragment energies based on the definitions

stated herein. Analytical methods used to compute protective armor or shielding thicknesses and energy absorption requirements should reflect established methods, acceptable to the certifying authority, that are supported by adequate test evidence. Protective armor, shielding, or deflectors that stop, slow down, or redirect uncontained fragments redistribute absorbed energy into the airframe. The resulting loads are significant for large fragments and should be considered as basic load cases for structural analysis purposes (reference paragraph 29.301). These structural loads should be defined and approved as ultimate loads acting alone. The protective devices and their supporting airframe structures should be able to absorb or deflect the fragment energies defined herein and still continue safe flight and landing. If hazardous, the deflected fragment trajectories and residual energies should also be considered.

C. Isolation or Redundancy.

(1) Other Engines - Although other engines may be considered critical, engine isolation from rotorburst on multi-engine rotorcraft is not mandatory. Other methods of minimizing the risk to the engine(s) may be acceptable.

(2) **Other Critical Components -** Isolation or redundancy of other critical components, the failure of which would not allow continued safe flight and landing should be evaluated relative to the risk of occurrence and where the risk is deemed unacceptable isolation or shielding or other means of reducing the risk should be incorporated.

D. **Composite Materials.** If containment devices, shields or deflectors are chosen by the applicant to be wholly or partially made from composites; they should comply with the structural requirements of AC 20-107A, "Composite Aircraft Structure", and AC 29-2A, Paragraph 788, "Substantiation of Composite Rotorcraft Structure", (which includes glass transition temperature considerations). Glass transition temperature considerations are critical for proper certification of composite or composite hybrid structures used in temperature zones that reach or exceed 200° to 250°F (93° to 121°C) for significant time periods. Hot fragment containment is typically accommodated in such protective devices by use of metal-composite hybrid designs that use the metal component's properties to absorb the fragment heat load after the entire hybrid structure has absorbed the fragment's impact load. These devices

should comply with paragraphs 29.609 and 29.1529 to ensure continued airworthiness.

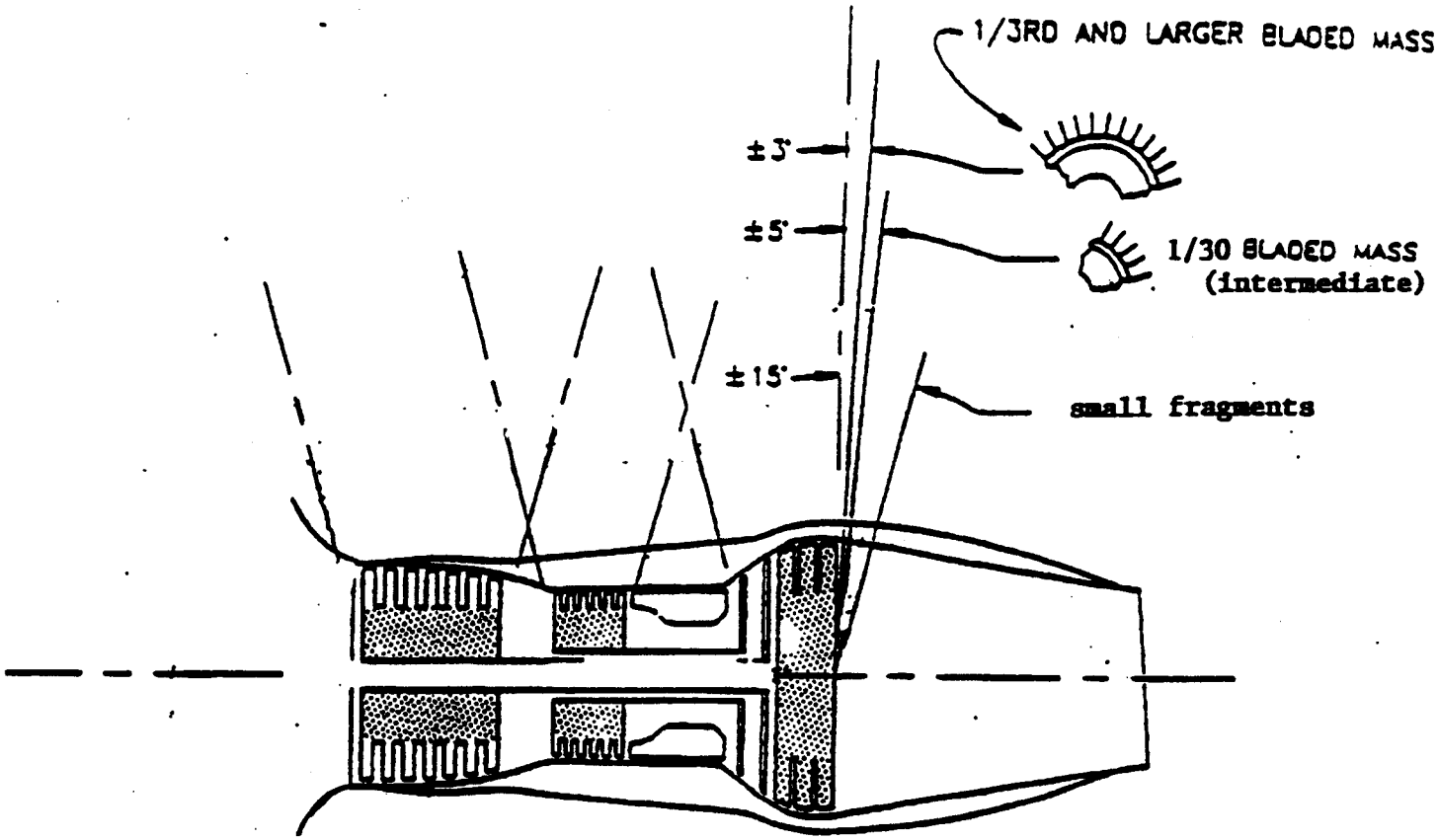

FRAGMENT SPREAD ANGLE IS THE ANGLE MEASURED, FORE AND AFT, FROM THE CENTER OF THE PLANE OF ROTATION INITIATING AT THE ENGINE OR APU SHAFT CENTERLINE.

NOTE: 1) THE POSSIBILITY OF TURBINE MOVEMENT SHOULD BE CONSIDERED.

2) ALL ROTORS ARE CONSIDERED TO BE FULLY BLADED FOR CALCULATING MASS.

3) FAILURE OF EACH ROTOR STAGE SHOULD BE CONSIDERED.

Figure 1 - Estimated Path of Fragments

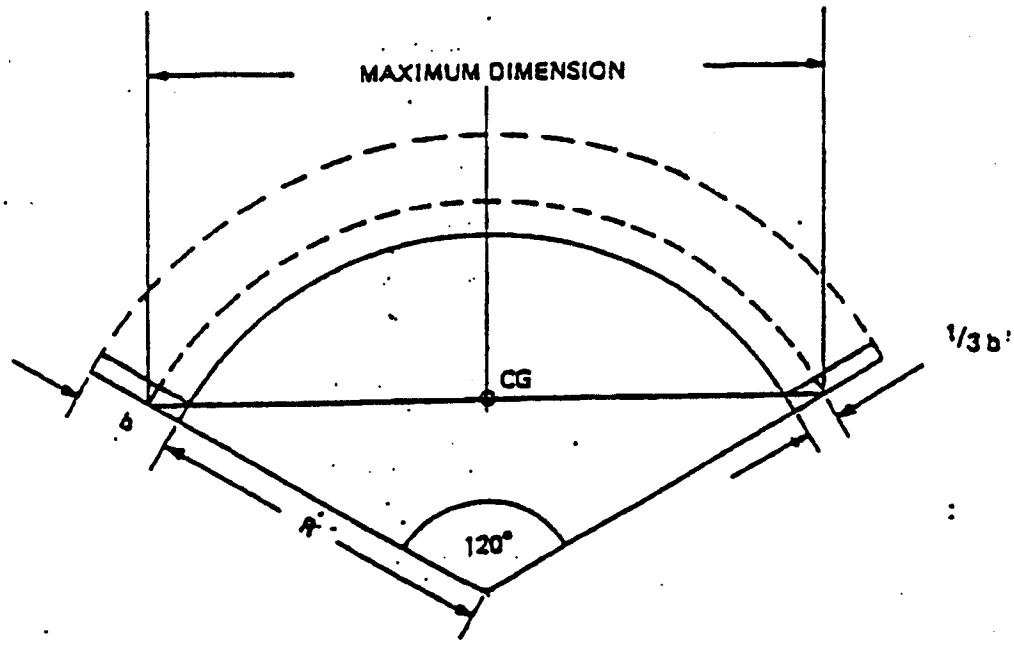

Where R = disc radius
b = blade length

The CG is taken to lie on the maximum dimension as shown.

FIGURE 2 — SINGLE ONE-THIRD DISC FRAGMENT

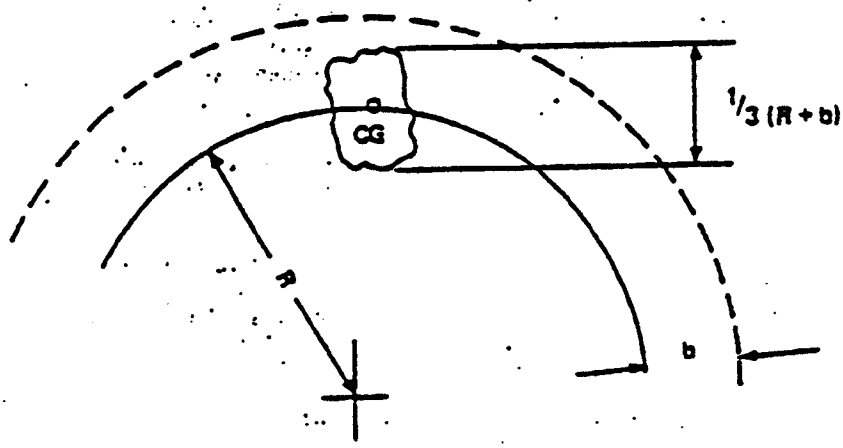

Where R = disc radius
b = blade length

Maximum dimension = ⅓ (R + b)

Mass assumed to be ⅙th of bladed disc

CG is taken to lie on the disc rim

FIGURE 3 — INTERMEDIATE & SMALL PIECE OF DEBRIS

Fig 4 BLADE FRAGMENT DEFINITION

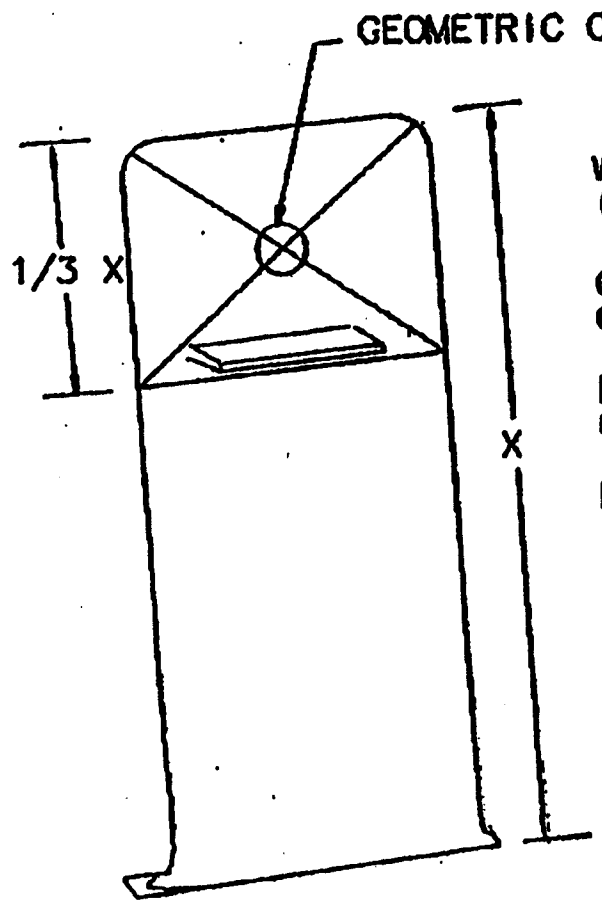

WHERE X = AIRFOIL LENGTH (LESS BLADE ROOT & PLATFORM)

CG IS TAKEN TO LIE AT THE CENTERLINE OF THE 1/3 FRAGMENT

FRAGMENT VELOCITY TAKEN AT GEOMETRIC CG

FRAGMENT MASS ASSUMED TO BE 1/3 OF THE AIRFOIL MASS

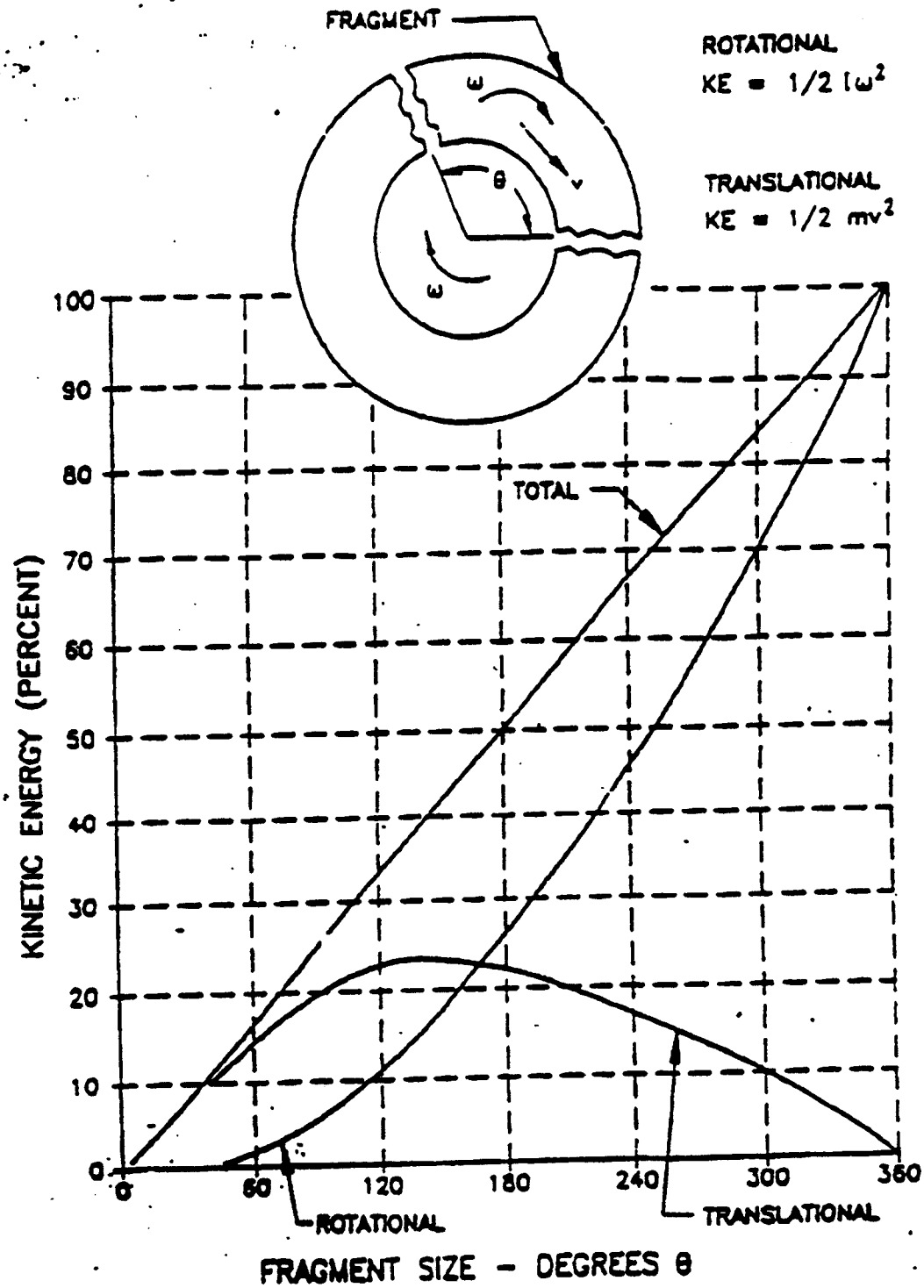

Figure 5 - Distribution of Translational and Rotational Kinetic Energy of Rotor-Component Fragments as a Function of Fragment Size θ

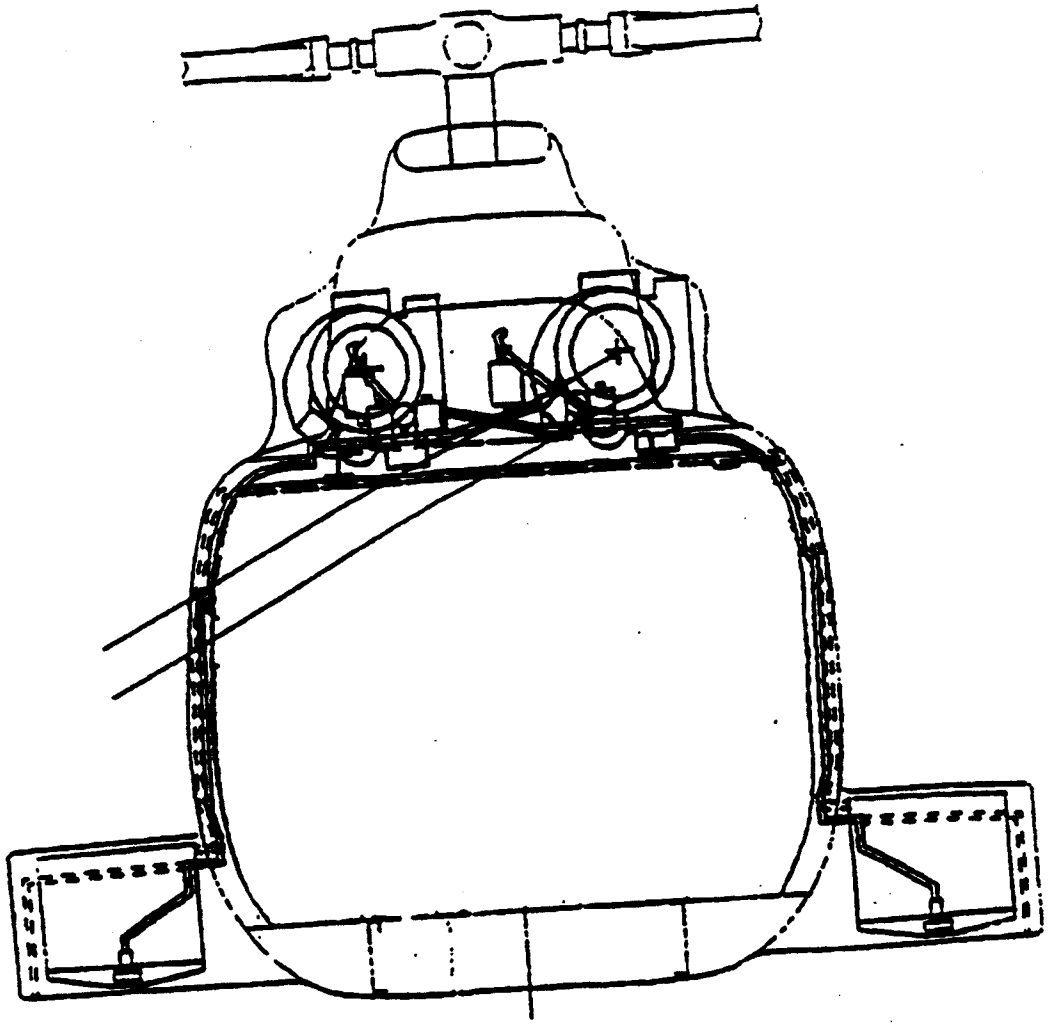

C.G. OF FRAGMENT
BECOMES CENTER OF ROTATION
OF FRAGMENT

FOR
SEPARATION
DISTANCE
CALCULATIONS

- 1/3RD ROTOR
WITH 1/3RD BLADE HEIGHT

Figure 6 - Cross Section Through Rotorcraft at Plane of Rotation of the Engine Disk Fragment

PP Task 1

June 17, 1999

Ref: 990617/2

2 3014

To: Aviation Rulemaking Advisory Committee,
Transport Airplane and Engines Issues Group (TAEIG)

From: Aviation Rulemaking Advisory Committee,
Powerplant Installations Harmonization Working Group (PPIHWG)

Subject: Harmonization of FAR/JAR 25.901(c)

The PPIHWG has reviewed the subject rule as requested by Task 1, Harmonize FAR/JAR 25.901. Technical agreement has been achieved on 25.901(c) by revising both the FAR and JAR versions of the rule and developing new advisory material. To facilitate the rulemaking process, the FAA and PPIHWG have agreed that this rule change proposal will be integrated into the §25.1309 related NPRM previously recommended by ARAC. Consequently, the PPIHWG is not including any draft NPRM with this submittal.

The attached rule change proposal and associated new Advisory Circular are submitted to TAEIG for approval and submittal to the FAA for further processing.

The JAA will prepare an equivalent NPA to introduce the revised requirement and the new advisory material.

Respectfully,

George P. Sallee (Co-Chair PPIHWG)

Jean-Claude Tchavdarov (Co-Chair PPIHWG)

Amend section 25.901 paragraph (c) to read as follows:

§ 25.901 Powerplant Installations

* * * * *

(c) The powerplant installation must comply with FAR 25.1309, except that the effects of the following need not comply with FAR 25.1309(b):

(i) Engine case burn through or rupture;
(ii) Uncontained engine rotor failure; and
(iii) Propeller debris release.

Ref: 990617/2
Attachment 2

#1
23015

U.S. Department of Transportation
Federal Aviation Administration

Advisory Circular

Subject: SAFETY ASSESSMENT OF POWERPLANT INSTALLATIONS

Date: [6/15/99]

AC/ACJ No: 25.901X

Initiated By: ANM-110

Change: Draft 13-MKM

THIS DOCUMENT IS A WORKING DRAFT AND IS NOT FOR PUBLIC RELEASE

1. PURPOSE.. This Advisory Circular (AC) describes an acceptable means for showing compliance with the requirements of § 25.901(c), "Powerplant, General -- Installation," of 14 CFR part 25 of the Federal Aviation Regulations (FAR). This document describes a method of conducting a "System Safety Assessment" of the powerplant installation as a means for demonstrating compliance. This guidance is intended to supplement the engineering and operational judgment that must form the basis of any compliance findings. The guidance provided in this document is meant for to airplane manufacturers, modifiers, foreign regulatory authorities, and Federal Aviation Administration transport airplane type certification engineers, and their designees. Like all advisory circular material, this AC is not, in itself, mandatory, and does not constitute a regulation. It is issued to describe an acceptable means, but not the only means, for demonstrating compliance with the powerplant installation requirements for transport category airplanes. Terms such as "shall" and "must" are used only in the sense of ensuring applicability of this particular method of compliance when the acceptable method of compliance described in this document is used.

2. RELATED FAR SECTIONS. Sections 25.571, 25.901, 25.903, 25.933, 25.1309, and 25.1529; Sections 33.28 and 33.75

3. APPLICABILITY. The guidance provided in this document applies to powerplant installations on transport category airplanes that are subject to the requirements of § 25.901. This guidance specifically concerns demonstrating compliance with the requirements of § 25.901(c), which states:

> *(c) The powerplant installation must comply with § 25.1309, except that the effects of the following need not comply with § 25.1309(b):*
>
> *(1) Engine case burn through or rupture;*

(2) Uncontained engine rotor failure; and

(3) Propeller debris release."

Section 25.901(c) is intended to provide an overall safety assessment of the powerplant installation that is consistent with the requirements of § 25.1309, while accommodating unique powerplant installation compliance policies. It is intended to augment rather than replace other applicable part 25 design and performance standards for transport category airplanes.

In accommodating unique policies related to powerplant compliance, the FAA has determined that specific guidance relative to demonstrating compliance with § 25.1309(b) is needed; such guidance is contained in this AC. [No unique compliance requirements for § 25.1309(a) and (c) are required for powerplant installations.]

Wherever this AC indicates that compliance with other applicable regulations has been accepted as also meeting the intent of § 25.901(c) for a specific failure condition, no additional dedicated safety analysis is required. Where this AC may conflict with AC 25.1309-1B ("System Design Analysis"), this AC shall take precedence for providing guidance in demonstrating compliance with § 25.901(c).

When assessing the potential hazards to the aircraft caused by the powerplant installation, the effects of an engine case rupture, uncontained engine rotor failure, engine case burn-through, and propeller debris release are excluded from § 25.901(c)/§ 25.1309. The effects and rates of these failures are minimized by compliance with part 33 ("Airworthiness Standards: Aircraft Engines"); part 35 ("Airworthiness Standards: Propellers"); § 25.903(d)(1) ("Engines"); § 25.905(d) ("Propellers"); and § 25.1193 ("Cowling and nacelle skin").

Furthermore, the effects of encountering environmental threats or other operating conditions more severe than those for which the aircraft is certified (such as volcanic ash or operation above placard speeds) need not be considered in the § 25.901(c)/§ 25.1309 compliance process. However, if a failure or malfunction can affect the subsequent environmental qualification or other operational capability of the installation, this effect should be accounted for in the § 25.901(c)/§ 25.1309 assessment.

The terms used in this AC are intended to be identical to those used in AC 25.1309-1B.

4. BACKGROUND. The fail-safe concept was inherent in § 25.1309(b) as codified. When first promulgated, that regulation originally stated:

> *"The equipment, systems, and installations must be designed to prevent hazards to the airplane if they malfunction or fail."*

Compliance with that rule normally was demonstrated for only one failure or malfunction at a time. However, as stated in the preamble to Notice of Proposed Rulemaking (NPRM), docket number 68-18 (August 22, 1968), which proposed new § 25.1309(b), (c), and (d) requirements, the trend towards more critical, complex, and integrated aircraft systems made it clear that the co-existence of *multiple* failures must be addressed. The question of how many co-existent failures must be tolerated without posing a hazard to the airplane was answered in that proposal by establishing a "logical and acceptable inverse relationship between the *probability* and the *severity* of each failure condition." This concept was adopted in § 25.1309 and applied specifically to powerplant installations through the creation of § 25.901(c) in Amendment 25-23 (35 FR 5671, Apr. 8, 1970).

As the first version of AC 25.1309 was being drafted, some powerplant specialists, both within the FAA and the industry, apparently became concerned that this new policy focused too much on the "frequency of occurrence" aspect of the new fail-safe rule and not enough on the "prevention of hazards" inherent in traditional fail-safe practices. While *average risk* was seen as an appropriate guide to help an engineer determine the level of redundancy required in the design, it was considered inappropriate to use *frequency of occurrence* to justify exposure to a preventable hazard. Furthermore, there was no restriction on the use of *probability*. This was of particular concern if this new policy could be used to accept the kinds of potentially catastrophic single failures that had historically been prohibited as far back as the early 1950's in Civil Air Regulation (CAR) 4b.606(b).

These concerns led to the revision of FAR 25.901(c) in Amendment 25-40 (42 FR 15042, March 17, 1977), to read:

> *"(c) For each powerplant . . . installation, it must be established that no single failure or malfunction or probable combination of failures will jeopardize the safe operation of the airplane, except that the failure of structural elements need not be considered if the probability of such failure is extremely remote."*

By changing § 25.901(c) as indicated above, FAA intended to safeguard the traditional "no single failure" concept while allowing for some "frequency of occurrence" considerations for multiple failures. However, unlike § 25.1309(b)(2) of the time, § 25.901(c) did not provide for regulation of hazards that did not jeopardize the safe operation of the airplane.

Despite the fact that the FAA stated in the preamble to NPRM, docket number 75-19, that § 25.1309 still applied to powerplant installations by its own terms, there was much controversy following the issuance of Amendment 25-40 as to whether or not the more generally applicable § 25.1309 still applied to powerplant installations. At the very least, the Amendment 25-40 revision to § 25.901(c) created standards and undefined

terminology that were inconsistent with those of the more generally applicable § 25.1309; this fact has caused significant difficulty both for applicants and for the FAA as well.

The shortcomings of both § 25.901(c) and § 25.1309, the desire to have more consistent standards and terminology throughout FAR part 25, and the initiative to harmonize FAR and JAR policies, has lead to the creation of the current § 25.901(c) (___FR_____) and the current § 25.1309 (___FR_____) with advisory material.

The current § 25.901(c) references the § 25.1309 rule. Section 25.1309 preserves the "*no single failure will jeopardize*" concept of § 25.901(c), while clarifying the "*inverse relationship between probability and severity*" concept.

This AC 25.901X has been developed to:

- ensure that the intent of the current § 25.901(c) rule is applied when finding compliance,
- advise on § 25.1309 concepts as they relate to the powerplant (and APU) installations, and
- assure that any uncertainty in that compliance finding is identified and suitably managed.

[This safety analysis also may be used to verify that the intent of the engine isolation requirements of § 25.903(b) are met.]

5. GENERAL SYSTEM SAFETY ASSESSMENT GUIDANCE. Compliance with § 25.901(c)/§ 25.1309 may be shown by a System Safety Assessment (SSA) substantiated by appropriate testing and/or comparable service experience. Such an assessment may range from a simple report that offers descriptive details associated with a failure condition, interprets test results, compares two similar systems, or offers other qualitative information; to a detailed failure analysis that may include estimated numerical probabilities.

The depth and scope of an acceptable SSA depends on:

- the complexity and criticality of the functions performed by the system(s) under consideration,
- the severity of related failure conditions,
- the uniqueness of the design and extent of relevant service experience,
- the number and complexity of the identified causal failure scenarios, and
- the detectability of contributing failures.

The SSA criteria, process, analysis methods, validation and documentation should be consistent with the guidance material contained in AC 25.1309-1B. Wherever there is unique guidance specifically for powerplant installations, this is delineated in Section 6, below.

In carrying out the SSA for the powerplant installation for § 25.901(c)/§ 25.1309, the results of the engine (and propeller) failure analyses (reference § 33.28 and § 33.75) should be used as inputs for those powerplant failure effects that can have an impact on the aircraft. However, the SSA undertaken in response to part 33 and part 35 may not address all the potential effects that an engine and propeller as installed may have on the aircraft.

For those failure conditions covered by analysis under part 33 and/or part 35, and for which the installation has no effect on the conclusions derived from these analyses, no additional analyses will be required to demonstrate compliance to § 25.901(c)/§ 25.1309.

The effects of structural failures on the powerplant installation, and vice versa, should be carefully considered when conducting system safety assessments:

a. Effects of structural failures on powerplant installation. The powerplant installation must be shown to comply with § 25.901(c) following structural failures that are anticipated to occur within the fleet life of the airplane type. Since the probability of a given structural failure is normally considered remote, consideration of structural failures is normally limited to potentially hazardous and catastrophic failure conditions. This should be part of the assessment of powerplant installation failure condition causes.

Examples of structural failures that have been of concern in previous powerplant installations are:

(1) Thrust reverser restraining load path failure that may cause a catastrophic inadvertent deployment.

(2) Throttle quadrant framing or mounting failure that causes loss of control of multiple engines.

(3) Structural failures in an avionics rack or related mounting that cause loss of multiple, otherwise independent, powerplant functions/components/systems.

b. Effects of powerplant installation failures on structural elements. Any effect of powerplant installation failures that could influence the suitability of affected structures, should be identified during the § 25.901(c) assessment and accounted for when demonstrating compliance with the requirements of part 25, Subpart C ("Structure") and D ("Design and Construction"). This should be part of the assessment of powerplant installation failure condition effects.

Some examples of historical interdependencies between powerplant installations and structures include:

(1) Fuel system failures that cause excessive fuel load imbalance.

(2) Fuel vent, refueling, or feed system failures that cause abnormal internal fuel tank pressures.

(3) Engine failures that cause excessive loads/vibration.

(4) Powerplant installation failures that expose structures to extreme temperatures or corrosive material.

6. SPECIFIC § 25.901(c) SYSTEM SAFETY ASSESSMENT GUIDANCE. This section provides compliance guidance unique to powerplant installations.

a. Undetected Thrust Loss. The SSA discussed in Section 5 should consider undetected thrust loss and its effect on aircraft safety. The assessment should include an evaluation of the failure of components and systems that could cause an undetected thrust loss, except those already accounted for by the approved average-to-minimum engine assessment.

(1) In determining the criticality of undetected thrust losses from a system design and installation perspective, the following should be considered:

(a) Magnitude of the thrust loss,*

(b) Direction of thrust,

(c) Phase of flight, and

(d) Impact of the thrust loss on aircraft safety.

(*Although it is common for safety analyses to consider the total loss of one engine's thrust, a small undetected thrust loss that persists from the point of takeoff power set could have a more significant impact on the accelerate/stop distances and takeoff flight path/obstacle clearance capability than a detectable single engine total loss of thrust failure condition at V_1)

(2) In addition, the level at which any thrust loss becomes detectable should be validated. This validation is typically influenced by:

(a) Impact on aircraft performance and handling,

(b) Resultant changes in powerplant indications,

(c) Instrument accuracy and visibility,

(d) Environmental and operating conditions,

(e) Relevant crew procedures and capabilities, etc.

(3) Less than 3% thrust loss on any one engine, and up to 3% on all engines, generally has been accepted as not having any significant adverse effect on safety. A 10% thrust asymmetry or a symmetric 20% thrust loss may be considered detectable.

b. Detected Thrust Loss. While detectable engine thrust losses can range in magnitude from 3% to 100% of total aircraft thrust, the total loss of useful thrust (inflight shutdown/IFSD) of one or more engines usually has the largest impact on aircraft capabilities and engine-dependent systems. Furthermore, single and multiple engine IFSD's tend to be the dominant thrust loss-related failure conditions for most powerplant installations. In light of this, the guidance in this AC focuses on the IFSD failure conditions. The applicant must consider other engine thrust loss failure conditions, as well, if they are anticipated to occur more often than the IFSD failure condition, or if they are more severe than the related IFSD failure condition.

(1) **Single Engine IFSD**. The effects of any single engine thrust loss failure condition, including IFSD, on aircraft performance, controllability, maneuverability, and crew workload are accepted as meeting the intent of § 25.901(c) if compliance is also demonstrated with:

- § 25.111 ("Takeoff path"),
- § 25.121 ("Climb: one-engine-inoperative"), and
- § 25.143 ("Controllability and Maneuverability -- General").

(a) Nevertheless, the effects of an IFSD on other aircraft systems or in combination with other conditions also must be assessed as part of showing compliance with § 25.901(c)/§ 25.1309. In this case, it should be noted that a single engine IFSD can result from any number of single failures, and that the rate of IFSD's range from approximately $1x10^{-4}$ to $1x10^{-5}$ per engine flight hour. This rate includes all failures within a typical powerplant installation that affect one -- and only one -- engine. Those failures within a typical powerplant that can affect more than one engine are described in Section 6.b.(2), below.

(b) If an estimate of the IFSD rate is required for a specific turbine engine installation, any one of the following methods are suitable for the purposes of complying with § 25.901(c)/§ 25.1309(b):

(i) Estimate the IFSD rate based on service experience of similar powerplant installations;

(ii) Perform a bottom-up reliability analysis using service, test, and any other relevant experience with similar components and/or technologies to predict component failure modes and rates; or

(iii) Use a conservative value of $1x10^{-4}$ per flight hour.

(c) If an estimate of the percentage of these IFSD's for which the engine is restartable is required, the estimate should be based on relevant service experience.

(d) The use of the default value delineated in paragraph 6.b.(1)(b)(iii) is limited to traditional turbine engine installations. However, the other methods [listed in 6.b.(1)(b)(i) and (ii), above] are acceptable for estimating the IFSD rates and restartability for other types of engines, such as reciprocating engines or some totally new type of engine or unusual powerplant installation with features such as a novel fuel feed system. In the case of new or novel components, significant non-service experience may be required to validate the reliability predictions. This is typically attained through test and/or technology transfer analysis.

(e) Related issues that should be noted here are:

(i) Section 25.901(b)(2) sets an additional standard for installed engine reliability. That regulation is intended to ensure that all technologically feasible and economically practical means are used to assure the continued safe operation of the powerplant installation between inspections and overhauls.

(ii) The effectiveness of compliance with § 25.111, § 25.121 and § 25.143 in meeting the intent of § 25.901(c) for single engine thrust loss is dependent on the accuracy of the human factors assessment of the crew's ability to take appropriate corrective action. For the purposes of compliance with § 25.901(c) in this area, it may be assumed that the crew will take the corrective actions called for in the airplane flight manual procedures and associated approved training.

(2) Multiple Engine IFSD. The guidance in AC 25.1309-1B provides for a catastrophic failure condition to exceed 1×10^{-9} per hour under certain conditions (i.e., well-proven design and construction techniques, and a predicted overall airplane level rate of catastrophic failures within historically-accepted service experience). Typical engine IFSD rates have been part of this historically-accepted service experience, and these IFSD rates are continuously improving. However, typical engine IFSD rates may not meet the AC 25.1309 condition that calls for 1×10^{-9} per hour for a catastrophic multiple engine IFSD.

(a) Current typical turbine engine IFSD rates, and the resulting possibility of multiple independent IFSD's leading to a critical power loss, are considered acceptable for compliance with § 25.901(c) without quantitative assessment. Therefore, there is no need to calculate the overall airplane level risk of catastrophic failure, even though the probability of a catastrophic failure condition due to multiple engine IFSD's may exceed 1×10^{-9}.

(b) Nevertheless, some combinations of failures within aircraft systems common to multiple engines may cause a catastrophic multiple engine thrust loss. These should be assessed to ensure that they meet the *extremely improbable* criteria. Systems to be considered include:

- fuel system,
- air data system,
- electrical power system,
- throttle assembly,
- engine indication systems, etc.

(c) The means of compliance described above is only valid for turbine engines, and for engines that can demonstrate equivalent reliability to turbine engines, using the means outlined in Section 6.a. of this AC. The approach to demonstrating equivalent reliability should be discussed early in the program with the certifying authority on a case-by-case basis.

c. Automatic Takeoff Thrust Control System. Part 25, Appendix I ["Installation of an Automatic Takeoff Thrust Control System (ATTCS)"], specifies the minimum reliability levels for these automatic systems. In addition to showing compliance with these reliability levels for certain combinations of failures, other failure conditions that can arise as a result of introducing such a system must be shown to comply with FAR § 25.901(c)/§ 25.1309.

d. Thrust Management Systems. A System Safety Assessment is essential for any airplane system that aids the crew in managing engine thrust (i.e., computing target engine ratings, commanding engine thrust levels, etc.). As a minimum, the criticality and failure hazard classification must be assessed. The system criticality will depend on:

- the range of thrust management errors it could cause,
- the likelihood that the crew will detect these errors and take appropriate corrective action, and

- the severity of the effects of these errors with and without crew intervention.

The hazard classification will depend on the most severe effects anticipated from any system. The need for more in-depth analysis will depend upon the systems complexity, novelty, initial failure hazard classification, relationship to other aircraft systems, etc.

(1) Automated thrust management features, such as autothrottles and target rating displays, traditionally have been certified on the basis that they are only conveniences to reduce crew workload and do not relieve the crew of any responsibility for assuring proper thrust management. In some cases, malfunctions of these systems can be considered to be minor, at most. However, for this to be valid, even when the crew is no longer directly involved in performing a given thrust management function, the crew must be provided with information concerning unsafe system operating conditions to enable them to take appropriate corrective action.

(2) Consequently, when demonstrating compliance with § 25.901(c)/§ 25.1309, failures within any automated thrust management feature which, if not detected and properly accommodated by crew action, could create a catastrophe should be either:

(a) considered a catastrophic failure condition when demonstrating compliance with § 25.1309(b)/§ 25.901(c); or

(b) considered an unsafe system operating condition when demonstrating compliance with the warning requirements of § 25.1309(c).

e. Thrust Reverser. Compliance with § 25.933(a) ("Reversing systems") provides demonstration of compliance with § 25.901(c)/§ 25.1309 for the thrust reverser inflight deployment failure conditions. A standard § 25.901(c)/§ 25.1309 System Safety Assessment should be performed for any other thrust reverser-related failure conditions.

7. TYPICAL FAILURE CONDITIONS FOR POWERPLANT SYSTEM INSTALLATIONS. The purpose of this section is to provide a list of typical failure conditions that ***may*** be applicable to a powerplant system installation. This list is by no means all-encompassing, but it captures some failure conditions that have been of concern in previous powerplant system installations. The applicant should review the specific failure conditions identified during the preliminary SSA for its installation against this list to assist in ensuring that all failure conditions have been identified and properly addressed.

As stated previously in this AC, the assessment of these failure conditions may range from a simple report that offers descriptive details associated with a failure condition, interprets test results, compares two similar systems, or offers other qualitative information; to a detailed failure analysis that may include estimated numerical probabilities. The assessment criteria, process, analysis methods, validation, and documentation should be consistent with the guidance material contained in AC 25.1309-1B.

a. Fire Protection System -- Failure Conditions:

(1) Loss of detection in the presence of a fire.

(2) Loss of extinguishing in the presence of a fire.

(3) Loss of fire zone integrity in the presence of a fire.

(4) Loss of flammable fluid shut-off or drainage capability in the presence of a fire.

(5) Creation of an ignition source outside a fire zone but in the presence of flammable fluids.

b. Fuel System -- Failure Conditions:

(1) Loss of fuel feed/fuel supply.

(2) Inability to control lateral and longitudinal balance.

(3) Hazardously misleading fuel indications.

(4) Loss of fuel tank integrity.

(5) Loss of fuel jettison.

(6) Uncommanded fuel jettison.

c. Powerplant Ice Protection -- Failure Conditions:

(1) Loss of propeller, inlet, engine, or other powerplant ice protection on multiple powerplants when required.

(2) Loss of engine/powerplant ice detection.

(3) Activation of engine inlet ice protection above limit temperatures.

d. Propeller Control -- Failure Conditions:

(1) Inadvertent fine pitch (overspeed, excessive drag).

(2) Inadvertent coarse pitch (over-torque, thrust asymmetry)

(3) Uncommanded propeller feathering.

(4) Failure to feather.

(5) Inadvertent application of propeller brake in flight.

(6) Unwanted reverse thrust (pitch).

e. Engine Control and Indication -- Failure Conditions:

(1) Loss of thrust.

(2) Loss of thrust control, including asymmetric thrust, thrust increases, thrust decreases, thrust fail fixed, and unpredictable engine operation.

(3) Hazardously misleading display of powerplant parameter(s).

f. Thrust Reverser -- Failure Conditions:

(1) Inadvertent deployment of one or more reversers.

(2) Failure of one or more reversers to deploy when commanded.

(3) Failure of reverser component restraints (i.e., opening of D-ducts in flight, release of cascades during reverser operation , etc.).

U.S. Department of Transportation
Federal Aviation Administration

Advisory Circular

#1
23016

Subject: MINIMIZING THE HAZARDS FROM ENGINE CASE BURNTHROUGH	**Date:** DRAFT -- 6/12/2000 **Initiated By:** ANM-110	**AC No: 20.135-2X** **Change:**

1. PURPOSE.

a. This Advisory Circular (AC) describes an acceptable means for demonstrating compliance with certain powerplant fire protection requirements of Title 14, Code of Federal Regulations (CFR) part 25 and part 23. Part 25 contains the airworthiness standards applicable to normal, utility, acrobatic, and commuter category airplanes; part 25 contains the airworthiness standards applicable to transport category airplanes. The means of compliance described in this document is intended to provide guidance to supplement the engineering and operational judgment that must form the basis of any compliance findings relative to design precautions to minimize the hazards to an airplane in the event a fire originating within the engine case that burns through the engine case.

b. The guidance provided in this document is directed towards airplane and engine manufacturers, modifiers, foreign regulatory authorities, and Federal Aviation Administration transport airplane type certification engineers and their designees.

c. As of the issuance date, the guidance provided in this AC was harmonized with that of the European Joint Aviation Authorities (JAA). It provides a method of compliance that has been found acceptable to both the FAA and JAA.

d. Like all advisory circular material, this AC is not, in itself, mandatory, and does not constitute a regulation. It is issued to describe an acceptable means, but not the only means, for demonstrating compliance with the requirements for transport category airplanes. Terms such as "shall" and "must" are used only in the sense of ensuring applicability of this particular method of compliance when the acceptable method of compliance described in this document is used. While these guidelines are not mandatory, they are derived from extensive Federal Aviation Administration and industry experience in determining compliance with the pertinent regulations.

e. This advisory circular does not change, create any additional, authorize changes in, or permit deviations from, regulatory requirements.

2. CANCELLATION. Paragraph 8. of FAA Advisory Circular 20-135, "Powerplant Installation and Propulsion System Component Fire Protection Test Methods, Standards and Criteria," is canceled. Additionally, the AC number of that document has been changed to AC 20-135-1.

3. APPLICABILITY. This AC applies to general aviation and transport category airplanes type certificated under 14 CFR parts 23 and 25, respectively (and airplanes type certificated under predecessor parts 3 and 4b of the Civil Air Regulations), for which a new, amended, or supplemental type certificate is requested.

4. RELATED DOCUMENTS.

a. Title 14, Code of Federal Regulations (Federal Aviation Regulations).

§ 23.903	Engines
§ 25.903	Engines (as amended by amendments 25-45 and 25-73)

b. FAA Advisory Circulars (AC). The AC listed below can be obtained from the U.S. Department of Transportation, Subsequent Distribution Center, SVC-121.23, Ardmore East Business Center, 3341 Q 75th Avenue, Landover, Maryland 20785.

AC 20-135-1	Powerplant Installation and Propulsion System Component Fire Protection Test Methods, Standards, and Criteria, 2/15/90 [or the equivalent International Standard Order (ISO) 2685]

5. DEFINITIONS. For the purposes of this AC, the following definitions should be used.

a. Continued Safe Flight and Landing. The condition where an airplane is capable of continued controlled flight and landing at an airport, possibly using emergency procedures, but without requiring exceptional pilot skill or strength.

b. Critical Component. Any system or structural component whose failure would contribute to or cause a hazardous or catastrophic failure condition.

c. Engine Case Burnthrough. A hole in the engine case that allows a high pressure and high temperature gas stream to escape from the engine.

6. BACKGROUND.

a. Although the design of turbine engines has continually improved over the years, service experience has shown that turbine engine case burnthrough events ("burnthroughs")

continue to occur. Burnthroughs have been caused by failure conditions or maintenance errors that have resulted in such problems as:

- leakage in the fuel nozzle supply line,
- malfunctions of the fuel nozzle,
- burnout of the turbine vane, and
- cracking of the combustion chamber.

b. Engine case burnthrough can result in high intensity flames emanating from the engine, with flame temperatures in excess of the capabilities of even fireproof materials to withstand them. Burnthroughs can be difficult to detect by normal zonal fire detection systems. The FAA's Aviation Rulemaking Advisory Committee (ARAC) collected historical service data for the period 1980 to 1998, which indicated that, out of 122 burnthrough events, 42 percent were detected by the fire detection system, and the remainder were detected by other means. The eight most severe events resulted in serious damage to the engine and engine-mounted components, major damage to the nacelle, and damage to the engine strut /pylon. [JD *QUESTION: Do we know if these incidents were on transport airplanes or on small ones? Do we need to differentiate?*]

7. ENGINE CASE BURNTHROUGH MODEL.

a. Applicants should carry out an assessment to determine the likely areas where a burnthrough could occur and the location of critical components that could be affected by the same burnthrough event. Consideration should be given both to available service experience of the engine (or similar types of engines), and to the analysis of failure modes within the whole engine that could result in burnthrough.

b. Additionally, applicants should establish foreseeable flame characteristics, including, as appropriate:

- temperature,
- pressure,
- hole location,
- hole diameter,
- heat flux, and
- temperature variation with time, distance, and flame trajectory.

c. In case no detailed information is available, applicants may consider the following flame characteristics as a model:

3000° F with a nominal 1-inch (25 mm) diameter orifice, having a torch pressure the same as the maximum combustion chamber pressure of the installed engine.*

** The nominal diameter may vary in consideration of the engine size.*

d. Applicants should assess the flame burnthrough length by using the most severe torching flame that could burn through the engine case. This is important because, depending on the engine design, there may be areas other than those adjacent to the immediate combustion section that are at risk for damage.

e. If no detailed information is available from the engine manufacturer about areas of the installation that are specifically at risk, applicants should consider the engine case burnthrough "threat area" to exist as follows:

- from 15 degrees upstream of where the fuel enters the engine core case, and
- downstream to 15 degrees aft of the trailing edge of the last high power (HP) turbine blades.

8. METHOD OF COMPLIANCE

a. Carry out a design assessment, using the appropriate flame burnthrough characteristics established in paragraph 7., above, to predict all the foreseeable effects of burnthrough on the airplane and its occupants. Special attention should be paid to direct or indirect effects on critical components and combustible materials. Consider that the temperatures and pressures associated with engine case burnthrough are typically higher than the criteria and melting point of the materials used in firewall construction. Therefore, conventional firewalls can fail under these conditions, which could cause damage to critical systems located in the engine, pylon, fuselage, or wing.

b. Evaluate the engine installation and airplane features to determine if engine case burnthrough can result in a hazard. Consider the following:

(1) For those airplanes where a hazard *would* result, ensure that the design features demonstrate that practical design precautions have been taken to minimize the risk to the airplane.

(2) Conduct an analysis of the installation for the hazards generated by engine case burnthrough. The analysis should define the aircraft hazards generated by the engine manufacturer's burnthrough threat model or the model described in paragraph 7., above.

(3) In the analysis, consider that the burnthrough conditions will exist until the engine is shut down. Unless the burnthrough barrier can be shown to last for the duration of the longest planned flight, provide a means for detection of the burnthrough conditions which

annunciates to the crew (since it is crew action to complete an engine shutdown that provides the protection to the airplane).

(4) Given that the detection system's warning to the crew may be inhibited, any burnthrough shield/barrier should be designed to last for a sufficient time to:

- protect the airplane, and
- allow the detection systems to function, and
- assure that crew recognition and engine shutdown is initiated.

(5) The shield must not permit hazardous burnthrough/penetration of the barrier in less time than what would be needed for a burnthrough inhibit indication to initiate, plus 30 seconds for crew action to shut down the engine.

9. GENERAL DESIGN PRACTICES. Fire detector system sensors typically are installed between the outside of the combustor/hp turbine cases and critical components. In this position, the sensors will detect a torching flame before any critical components can be damaged to level that would create a hazard to the airplane. However, service history indicates that, if the sensors are located in the threat area, they can be severely damaged by engine case burnthrough. Detection systems with sensors located in the threat area, including the associated annunciation logic, should be designed to detect a torching flame even if the sensors are severed or otherwise damaged by the burnthrough. Some considerations that have proven to be effective for minimizing these hazards include:

a. For detection:

(1) Installation of traditional overheat fire detection/indication.

(2) Use of engine indications [e.g., high exhaust gas temperature (EGT)] for limiting exposure to the event.

(3) Use of alternative detection technologies that may provide improved reliability of detection and indication of a burnthrough.

b. For shielding of critical locations:

(1) Installation of metal (e.g., tantalum) or metal combinations (e.g., ceramic-coated metallic shielding) ablative materials to protect critical components.

(2) Use of intervening installation components (sacrificial) to serve as time-limited barriers, and to allow for the detection of back side over-temperature and subsequent engine shutdown.

(3) Use of fan air scrubbing at minimum airspeed.

c. Location of critical components: If a burnthrough could result in hazardous damage to a fuel tank installation of a dry bay may be an acceptable method of mitigating this threat. [JD COMMENT: *I think something was left out of this sentence that was added. Pls re-read it and let me know.*]

10. COMPLIANCE DEMONSTRATION FOR TORCHING FLAME BARRIERS.
Applicants may demonstrate compliance with the torching flame barrier requirements by using an appropriate model as described in paragraph 7., above. Prior to beginning the compliance process, applicants should submit their proposed certification method to the FAA office that is responsible for the project for coordination and approval.

Aircraft Certification Service

FAA Action

Federal Register

Tuesday,
January 14, 2003

Part III

Department of Transportation

Federal Aviation Administration

14 CFR Part 25

Design Standards for Fuselage Doors on Transport Category Airplanes; Proposed Rule

DEPARTMENT OF TRANSPORTATION

Federal Aviation Administration

14 CFR Part 25

[Docket No. FAA–2003–14193; Notice No. 03–01]

RIN 2120–AH34

Design Standards for Fuselage Doors on Transport Category Airplanes

AGENCY: Federal Aviation Administration (FAA), DOT.

ACTION: Notice of proposed rulemaking (NPRM).

SUMMARY: The Federal Aviation Administration (FAA) proposes to amend the design standards for fuselage doors, hatches, and exits on transport category airplanes. This action would improve door integrity by providing design criteria that would ensure that doors remain secure under all circumstances that service experience has shown can happen. Adopting this proposal also would relieve a certification burden on industry by eliminating regulatory differences between the airworthiness standards and related guidance material of the United States and Europe.

DATES: Send your comments on or before April 14, 2003.

ADDRESSES: Address your comments to the Docket Management System, U.S. Department of Transportation, Room Plaza 401, 400 Seventh Street, SW., Washington, DC 20590–0001. You must identify the docket number FAA–2003–14193 at the beginning of your comments, and you should submit two copies of your comments. If you wish to receive confirmation that the FAA received your comments, include a self-addressed, stamped postcard. You also may submit comments through the Internet to: *http://dms.dot.gov.*

You may review the public docket containing comments to proposed regulations in person in the Dockets Office between 9 a.m. and 5 p.m., Monday through Friday, except Federal holidays. The Dockets Office is on the plaza level of the NASSIF Building at the Department of Transportation at the above address. Also, you may review public dockets on the Internet at *http://dms.dot.gov.*

FOR FURTHER INFORMATION CONTACT: Jeff Gardlin, Federal Aviation Administration, Airframe/Cabin Safety Branch (ANM–115), Transport Airplane Directorate, Aircraft Certification Service, 1601 Lind Avenue SW., Renton, Washington 98055–4056; telephone (425) 227–2136; facsimile (425) 227–1320.

SUPPLEMENTARY INFORMATION:

How Do I Submit Comments to This NPRM?

The FAA invites interested persons to participate in this rulemaking by submitting written comments, data, or views. We also invite comments relating to the economic, environmental, energy, or federalism impacts that might result from adopting the proposals in this document. The most helpful comments reference a specific portion of the proposal, explain the reason for any recommended change, and include supporting data. We ask that you send us two copies of written documents.

We will file in the docket all comments we receive, as well as a report summarizing each substantive public contact with FAA personnel concerning this proposed rulemaking. The docket is available for public inspection before and after the comment closing date. If you wish to review the docket in person, go to the address in the **ADDRESSES** section of this preamble between 9 a.m. and 5 p.m., Monday through Friday, except Federal holidays. You may also review the docket using the Internet at the web address in the **ADDRESSES** section.

Before acting on this proposal, we will consider all comments we receive on or before the closing date for comments. We will consider comments filed late if it is possible to do so without incurring expense or delay. We may change this proposal in light of the comments we receive.

If you want the FAA to acknowledge receipt of your comments on this proposal, include with your comments a pre-addressed, stamped postcard on which the docket number appears. We will stamp the date on the postcard and mail it to you.

How Can I Obtain a Copy of This NPRM?

You can get an electronic copy using the Internet by:

(1) Searching the Department of Transportation's electronic Docket Management System (DMS) web page (*http://dms.dot.gov/search*);

(2) Visiting the Office of Rulemaking's web page at *http://www.faa.gov/avr/arm/nprm.cfm?nav=nprm;* or

(3) Accessing the **Federal Register**'s web page at *http://www.access.gpo.gov/su_docs/aces/aces140.html.*

You can also get a copy by submitting a request to the Federal Aviation Administration, Office of Rulemaking, ARM–1, 800 Independence Avenue SW., Washington, DC 20591, or by calling (202) 267–9680. Be sure to identify the docket number, notice number, or amendment number of this rulemaking.

Background

What Prompted this Proposed Rule?

Following a major accident in 1974, which involved the opening of a fuselage door on a transport category airplane during flight, the FAA amended the applicable safety standards to provide a higher level of safety for fuselage doors. In 1980, the FAA issued amendment 25–54 to Title 14, Code of Federal Regulations (CFR), part 25 (45 FR 60172, September 11, 1980). The objective of this amendment was to provide a level of safety in doors that would be consistent with the level of safety required for other critical systems on the airplane, such as primary flight controls. This was achieved by:

- Requiring redundancy and fail-safe features in the door operating systems, and
- Providing protection from anticipated human errors.

In 1989, another wide-body transport category airplane lost a lower lobe cargo door during flight, along with a portion of fuselage structure above the door. Because of this accident and other similar accidents, the Air Transport Association (ATA) of America formed an industry task force to review door designs on transport category airplanes. This group was chartered to review the design and operation of doors on the current fleet of transport airplanes, and to recommend actions that would prevent any further unintended opening of outward opening doors. The group also reviewed relevant current regulations and advisory material, and provided recommendations to the FAA for necessary rule changes. The ATA submitted its recommendations to the FAA in a report entitled, ''ATA Cargo Door Task Force Final Report,'' dated May 15, 1991.

What NTSB Safety Recommendations are Related to this Proposed Rule?

As a result of its investigation of the airplane accidents associated with fuselage doors opening during flight, the National Transportation Safety Board (NTSB) also issued several Safety Recommendations concerning doors on transport category airplanes. The NTSB asked the FAA to consider the following recommendations:

Safety Recommendation A–89–092: ''Issue an airworthiness directive to require that the manual drive units and electrical actuators for the Boeing 747 cargo doors have torque-limiting devices

to ensure the lock sectors, modified in accordance with the requirements of Airworthiness Directive (AD)–88–12–04 [amendment 39–5934 (53 FR 18079, May 20, 1988)], cannot be overridden during mechanical or electrical operation of the latch cams.''

Safety Recommendation A–89–093: ''Issue an airworthiness directive for non-plug cargo doors on all transport category airplanes requiring the installation of positive indicators to ground personnel and flight crews confirming the actual position of both the latch cams and locks, independently.''

Safety Recommendation A–89–094: ''Require that fail-safe design considerations for non-plug cargo doors on present and future transport category airplanes account for conceivable human errors, in addition to electrical and mechanical malfunctions.''

Safety Recommendation A–92–21: ''Require that the electrical actuating system for non-plug cargo doors on transport category aircraft provide for the removal of all electrical power from circuits on the door after closure (except for any indicating circuit power necessary to provide positive indication that the door is properly latched and locked) to eliminate the possibility of uncommanded actuator movements caused by wiring short circuits.''

The FAA responded to these Safety Recommendations by issuing various airworthiness directives, applicable to the current fleet of transport category airplanes, and requiring relevant modifications and inspections of the fuselage doors.

Subsequent to the conclusion of the harmonization activity (as discussed below) that led to this proposal, the FAA received an additional safety recommendation from the NTSB, A–02–020. The NTSB recommends that the FAA ''Require all newly certificated transport category airplanes [to] have a system for each emergency exit door to relieve pressure so that they can only be opened on the ground after a safe differential pressure level is attained.'' We have not yet determined the appropriate course of action with regard to this recommendation, and no regulatory action is being proposed at this time. However, we solicit comments on this recommendation and, if appropriate, will develop a supplemental Notice of Proposed Rulemaking to propose an additional provision addressing this issue.

What Are the Relevant Airworthiness Standards in the United States?

In the United States, the airworthiness standards for type certification of transport category airplanes are contained in Title 14, Code of Federal Regulations (CFR), part 25. Manufacturers of transport category airplanes must show that each airplane they produce of a different type design complies with the appropriate part 25 standards. These standards apply to:

- Airplanes manufactured within the U.S. for use by U.S.-registered operators, and
- Airplanes manufactured in other countries and imported to the U.S. under a bilateral airworthiness agreement.

What Are the Relevant Airworthiness Standards in Europe?

In Europe, the airworthiness standards for type certification of transport category airplanes are contained in Joint Aviation Requirements (JAR)-25, which are based on part 25. These were developed by the Joint Aviation Authorities (JAA) of Europe to provide a common set of airworthiness standards within the European aviation community. Twenty-three European countries accept airplanes type certificated to the JAR–25 standards, including airplanes manufactured in the U.S. that are type certificated to JAR–25 standards for export to Europe.

What Is ''Harmonization'' and How Did It Start?

Although part 25 and JAR–25 are very similar, they are not identical in every respect. When airplanes are type certificated to both sets of standards, the differences between part 25 and JAR–25 can result in substantial additional costs to manufacturers and operators. These additional costs, however, frequently do not bring about an increase in safety. In many cases, part 25 and JAR–25 may contain different requirements to accomplish the same safety intent. Consequently, manufacturers are usually burdened with meeting the requirements of both sets of standards, although the level of safety is not increased correspondingly.

Recognizing that a common set of standards would not only benefit the aviation industry economically, but also maintain the necessary high level of safety, the FAA and the JAA began an effort in 1988 to ''harmonize'' their respective aviation standards. The goal of the harmonization effort is to ensure that:

- Where possible, standards do not require domestic and foreign parties to manufacture or operate to different standards for each country involved; and
- The standards adopted are mutually acceptable to the FAA and the foreign aviation authorities.

The FAA and JAA have identified a number of significant regulatory differences (SRD) between the wording of part 25 and JAR–25. Both the FAA and the JAA consider ''harmonization'' of the two sets of standards a high priority.

What Is ARAC and What Role Does It Play in Harmonization?

After initiating the first steps towards harmonization, the FAA and JAA soon realized that traditional methods of rulemaking and accommodating different administrative procedures was neither sufficient nor adequate to make appreciable progress towards fulfilling the goal of harmonization. The FAA identified the Aviation Rulemaking Advisory Committee (ARAC) as an ideal vehicle for assisting in resolving harmonization issues, and, in 1992, the FAA tasked ARAC to undertake the entire harmonization effort.

The FAA had formally established ARAC in 1991 (56 FR 2190, January 22, 1991), to provide advice and recommendations concerning the full range of the FAA's safety-related rulemaking activity. The FAA sought this advice to develop better rules in less overall time and using fewer FAA resources than previously needed. The committee provides the FAA firsthand information and insight from interested parties regarding potential new rules or revisions of existing rules.

There are 74 member organizations on the committee, representing a wide range of interests within the aviation community. Meetings of the committee are open to the public, except as authorized by section 10(d) of the Federal Advisory Committee Act.

The ARAC establishes working groups to develop recommendations for resolving specific airworthiness issues. Tasks assigned to working groups are published in the **Federal Register**. Although working group meetings are not generally open to the public, the FAA solicits participation in working groups from interested members of the public who possess knowledge or experience in the task areas. Working groups report directly to the ARAC, and the ARAC must accept a working group proposal before ARAC presents the proposal to the FAA as an advisory committee recommendation.

The activities of the ARAC will not, however, circumvent the public rulemaking procedures; nor is the FAA limited to the rule language ''recommended'' by ARAC. If the FAA accepts an ARAC recommendation, the

agency proceeds with the normal public rulemaking procedures. Any ARAC participation in a rulemaking package is fully disclosed in the public docket.

Under this program, the FAA provides ARAC with an opportunity to review, discuss, and comment on the FAA's draft NPRM. In the case of this rulemaking, ARAC concurred with the draft NPRM, without changes.

Discussion of the Proposal

What Is the General Scope of the Proposal?

The scope of this proposal is to revise and reorganize the existing rules in 14 CFR part 25 to provide the following:

1. Clarification of the existing design requirements for doors.
2. Definitive criteria for the door design requirements that are covered in the existing rules by general text.
3. Additional fail-safe requirements and detailed door design requirements, based on the recommendations of the NTSB and the ATA, and on current industry practice.

What Definitions Apply to the Proposed Rule?

To understand the rest of this proposal, the following definitions are helpful:

A *latch* is a movable mechanical element that, when engaged, prevents the door from opening.

A *lock* is a mechanical element that monitors the latch position and, when engaged, prevents the latch from becoming disengaged.

Latched means the latches are fully engaged with their structural counterparts and held in position by the latch operating mechanism.

Locked means the locks are fully engaged.

Latching mechanism includes the latch operating mechanism and the latches.

Locking mechanism includes the lock operating mechanism and the locks.

Closed means the door has been placed within the doorframe in such a position that the latches can be operated to the ''latched'' condition.

Fully closed means the door is placed within the doorframe in the position that it will occupy when the latches are in the latched condition.

What Are the Specific Proposed Changes?

This action proposes changes mainly to § 25.783, ''Doors.'' First, the title of § 25.783 would be changed from the current ''Doors'' to ''Fuselage doors'' to more accurately reflect the applicability of this revised section. The term ''doors,'' as used in this proposed revision of § 25.783, would also include hatches, openable windows, access panels, covers, etc., on the exterior of the fuselage that do not require the use of tools to open or close. This also would include each door or hatch through a pressure bulkhead, including any bulkhead that is specifically designed to function as a secondary pressure bulkhead under the prescribed failure conditions of 14 CFR part 25.

Other specific changes to § 25.783 are as follows:

Proposed Changes to § 25.783(a)

The format and portions of the text of paragraph (a) would be totally revised. The proposed text would describe the types of doors to which this section of the regulations is applicable, and would clarify the fact that the requirements apply to the unpressurized portions of flight as well as to pressurized flight.

Proposed paragraph (a) also would provide the general design requirements for doors. These general design requirements are not substantively different from the requirements contained in existing § 25.783. A reference to the locking requirements in § 25.607 (''Fasteners'') would be included in paragraph (a). Experience has shown that it is advisable to add this reference to ensure that these requirements are not overlooked during the door design process. One provision of this proposed requirement, which is new, would require the removal of all power that could initiate the unlatching and unlocking of the door during flight. It is based on NTSB Safety Recommendation A–92–21, discussed previously.

Proposed Changes to § 25.783(b)

Paragraph (b) would be revised to require safeguards against both inadvertent and deliberate opening of doors during flight. It would clarify the existing requirement that doors must be prevented from opening inadvertently (that is, not deliberately, and without forethought, consideration, or consultation) by people on board the airplane during flight. The intent of this requirement is to protect both the passenger and the airplane from hazards resulting from the unintentional actions by persons on board.

In addition, the proposal would make it clear that the door must be safeguarded against the deliberate opening during flight by persons on board. The proposed text requires that the possibility of deliberate opening be minimized. The intent of this requirement is that, for doors in pressurized compartments, it should not be possible to open the doors after takeoff, when the compartment is pressured to a significant level. (During approach, takeoff, and landing when compartment differential pressure is lower, intentional opening may be possible; however, during these short phases of the flight, all passengers are expected to be seated with seat belts fastened. The exposure to deliberate opening would therefore be minimized.) Further guidance on this subject is given in draft Advisory Circular 25.783–1X, discussed later in this document.

Further, for doors that can be opened under significant cabin pressure, or for doors in non-pressurized airplanes, the use of an auxiliary securing means, such as speed-activated or barometrically-activated devices, may be necessary. Paragraph (b) would require that, if auxiliary devices are used, they must be designed so no single failure or malfunction could prevent more than one exit from opening. Past interpretations of existing paragraph (f) have resulted in this type of design requirement being applied to type certification projects.

Proposed Changes to 25.783(c)

Paragraph (c) would restate the existing requirements of paragraph (f) for a provision to prevent the airplane from becoming pressurized if the door is not fully closed, latched, and locked. The current requirement states:

External doors must have provisions to prevent the initiation of pressurization of the airplane to an unsafe level if the door is not fully closed and locked * * *''

However, this proposal would remove the phrase, ''the initiation of'' from this text because it is inconsistent and confusing with regard to a common method of preventing pressurization that employs vent doors. Mechanical vent doors allow the pressurization system to initiate and a small amount of pressure may exist as the air flows through the vents. The revised text would correct this inconsistency. It also would allow for certain types of doors that:

- Can safely and reliably act as their own venting mechanism when not fully closed and latched; or
- Would automatically close and latch, as appropriate to the door design, before an unsafe level of pressure is reached.

For these doors without an independent means, the assessment for a safe and reliable closing would include consideration of single failures and adverse conditions, such as debris in the doorway.

Paragraph (c)(1) would provide a definitive criterion for the reliability level of the pressurization prevention system and would read: ''The provision must be designed to function after any single failure, or after any combination of failures not shown to be extremely improbable.'' This criterion is consistent with:

- The interpretation of the general text of the existing rule, and
- The current industry practice for new designs.

The FAA does not intend that the proposed criterion impose a new level of reliability for mechanical vent systems that is more stringent than that established by typical fail-safe designs. However, it would provide a definitive criterion for use in evaluating these vent systems or other systems that may interconnect with the airplane's pressurization system. A means for preventing pressurization that functions with a high degree of reliability despite operator and flightcrew errors would be consistent with NTSB Safety Recommendation A–89–094, described previously, which recommends fail-safe features that account for conceivable human errors.

Paragraph (c)(2) would exempt certain doors that meet the requirements of proposed paragraph (h) from the requirement to have a separate means to prevent pressurization. Generally such doors would have to either remain open, so that pressurization cannot take place, or must close and latch as pressurization takes place. Under this provision, these doors would have to be shown not to create a hazardous condition, assuming single failures in the latching mechanism as well as jams due to failures or debris. This would have to be shown from every possible position during the pressurization process. This proposal formalizes and standardizes previous equivalent level of safety findings made under the provisions of § 21.21(b)(1).

Proposed Changes to § 25.783(d)

Paragraph (d) would provide requirements for the detail design and fail-safe features of latching and locking mechanisms. Advisory Circular (AC) 25.783–1 ''Fuselage Doors, Hatches, and Exits,'' dated December 10, 1986, currently recommends some of these design features; the proposed rule would make these features mandatory.

The detail design requirements for latches and locks contained in this proposal are consistent with current industry practice, as applied to doors whose initial movement is not inward. However, the applicability of the proposed requirement would be extended to any door, regardless of the direction of initial movement.

Paragraph (d) also would require the latching mechanism to be designed to eliminate forces that would drive the latches to the open position. However, the FAA recognizes there still may be ratcheting forces that could progressively move the latches to the *unlatched* position. Therefore, the rule also would require the latching system to be designed such that the latches are positively secured without regard to the position of the locks.

Proposed paragraph (d)(3)(iii) contains the requirement for a fail-safe criterion for the locking system that would apply only to outward opening doors while under pressure. Since all the locks are usually designed as a single locking system, it is possible that single failures in the locking system could result in the unlocking of several or all the latches. Although the latches would continue to be held in the latched position by the latch system securing means, the FAA has determined that, for the most critical designs, during pressurized flight, single failures in the locking system should not unlock more latches than are needed to restrain the door.

Proposed paragraphs (d)(5) and (6) contain detail requirements for the lock elements and locking system to ensure that they will restrain the latches under anticipated loading conditions, and to ensure that the locks cannot be engaged unless the door is properly latched. Experience has shown these features to be fundamental to the design of a safe door.

Finally, proposed paragraph (d)(7) would exclude the requirement for a locking system from any door for which unlatching was not a hazard. In that case, a locking mechanism would not add to the safety of the door, since unlatching (which is what a locking mechanism is supposed to prevent) does not create a hazardous condition.

Proposed Changes to § 25.783(e)

Paragraph (e) would require warning, caution, and advisory indications for doors. These requirements for indication are similar to the current provisions for indication of door status in this section, but provide added features consistent with NTSB and ATA recommendations. The prescribed ''improbable'' level for an erroneous indication that the door is fully closed, latched, and locked is proposed to be the same as the requirement of existing paragraph (e). However, the applicability would be extended to each door, if unlatching of the door in flight could be a hazard.

Paragraph (e) also would require an aural warning before takeoff for any door that is not fully closed, latched, and locked if opening of the door would not allow safe flight. The FAA has determined that this requirement is necessary, based on service history, including the crash of an airplane shortly after takeoff as a result of aerodynamic interference from an open cargo door. This system should function in a manner similar to the takeoff configuration warning systems required by § 25.703 (''Takeoff warning system'').

Paragraph (e) also would require that there be a positive means to display indications and signals to the door operator. This proposed requirement is consistent with NTSB Safety Recommendation A–89–093, discussed previously.

Proposed Changes to § 25.783(f)

This proposal would revise paragraph (f) to require a provision for direct visual inspections to determine that the door is fully closed, latched, and locked. The specific location and quantity of the viewing means would depend on the specific design, but might not require a viewing means for each lock, provided that the number of visual indicators provided would not give a false indication. This proposed requirement is similar to that of the existing paragraph (b), which requires a means for direct visual inspection of the locking mechanism. However, this proposal would extend the requirements to apply to any door, irrespective of the direction of initial movement, if the unlatched door could be a safety hazard.

Proposed Changes to § 25.783(g)

This proposal would revise paragraph (g) to provide relief from certain requirements of the current rule that are applicable to access panels not subject to pressurization and for which opening would be inconsequential to safety. In addition, the proposal would provide relief from certain of the current requirements applicable to:

- Maintenance doors that are not a safety hazard if opened; and
- Removable emergency exits, because they are not used in normal operation and therefore not subjected to the same level of human error, abuse, and damage as other doors and hatches.

Proposed Changes to § 25.783(h)

Paragraph (h) would prescribe detail design features that a door would need to have if it were to be considered as a door that is ''not a hazard'' when this phrase is used in other paragraphs of § 25.783. This paragraph effectively defines the criteria under which a door

could become a potential hazard. The criteria include hazards due to decompression, aerodynamic interference, interaction with other systems or structure (for example, through the door departing the airplane and impacting an engine or control surface). For the purposes of this determination, opening by persons is treated separately from the tendency of the door to remain closed when under pressure. However, both are considerations that must be satisfied to determine that the door is not a hazard.

Proposed Changes to § 25.783(i)

The current requirements of paragraph (i) that apply to the design of air stairs (integral stair installed in a passenger entry door that is qualified as a passenger emergency exit) would be removed from existing § 25.783 and added in § 25.810 (''Emergency egress assist means and escape routes'') as a new paragraph (e), without change in text. The FAA considers that manufacturers, applicants, and others seeking compliance with rules would be better served by having these requirements located in the same section of the rules where other related requirements are found.

Proposed Changes to § 25.783(j)

The special requirement for lavatory doors contained in current paragraph (j) would be removed and placed in a new § 25.820 (''Lavatory doors''), with only minor editorial changes in text. The FAA considers that less confusion will be caused, and the regulated public will be better served, if all requirements about this particular subject are located in one separate place.

Other Proposed Changes

Several other provisions currently in § 25.783 would be deleted, since they duplicate the requirements applicable to emergency exit design that are contained in, or would be moved without substantive change to, other sections of part 25. The FAA considers that less confusion would be caused, and that the regulated public would be better served, if all requirements concerning a particular subject are located in one place. The FAA proposes the following specific changes:

§ 25.809(b) (''Emergency exit arrangement''):

This paragraph would be revised by adding a new paragraph (b)(3) to require that each emergency exit must be capable of being opened, when there is no fuselage deformation, ''even though persons may be crowded against the door on the inside of the airplane.'' This specific requirement is currently a part of § 25.783(b), but is more appropriate as part of the emergency exit arrangement requirements of § 25.809.

§ 25.809(c):

This paragraph would be revised to include the requirement that the means of opening emergency exits also must be marked so it can be readily located and operated, even in darkness. This requirement is currently located in § 25.783(b), but is more appropriate as part of the emergency exit arrangement requirements of § 25.809.

§ 25.809(f):

This paragraph would be revised to require that the external door be located where persons using it will not be endangered by the propellers when appropriate operating procedures are used. This requirement currently is found in § 25.783(d), but is more applicable to the emergency exit arrangement requirements of § 25.809. Existing § 25.809(f) is redundant with the requirements for locking mechanisms contained in § 25.783.

In addition, the FAA is also proposing to correct an error in the current regulations as follows:

§ 25.807 (''Emergency exits''):

Existing § 25.783 requires that passenger entry doors also meet the airworthiness standards required for emergency exits. In addition, the current JAR 25.807, issued by the European JAA, requires that certain other fuselage doors, as well as passenger entry doors, meet the same standards as emergency exits. Before the adoption of Amendment 25–88 (61 FR 57956, November 8, 1996), part 25 also contained a requirement similar to that of JAR 25.807; however, that requirement was unintentionally omitted when Amendment 25–88 was adopted. This proposed rule would correct this discrepancy by setting forth this requirement in a revised § 25.807(h), and by revising § 25.783 to refer to that section.

Specifically, the proposed § 25.807(h) would be revised to refer to ''other exits'' that must meet the applicable emergency exit requirements of §§ 25.809 through 25.812. Those exits include:

- Each emergency exit in the passenger compartment in excess of the minimum number of required emergency exits;
- Floor-level doors or exits that are accessible from the passenger compartment and larger than a Type II exit, but less than 46 inches wide; and
- Other ventral or tail cone passenger exits.

This provision is intended to address doors or other means of egress accessible from the passenger cabin. The width limit of 46 inches was derived from cargo doors that have been installed in smaller transport category airplanes. That is, cargo doors are not required to be exits. However, this provision does not relieve any emergency exit for which passenger credit is received from any of the applicable requirements.

Is Existing FAA Advisory Material Adequate?

The FAA also proposes to revise AC 25.783–1. The revised AC would describe an acceptable means, but not the only means, for complying with the proposed revised regulations described in this NPRM. The AC would provide guidance for showing compliance with structural and functional safety standards for doors and their operating systems. The availability of the proposed AC revision for public comment will be announced in the **Federal Register** in the near future.

What Regulatory Analyses and Assessments Has the FAA Conducted?

Regulatory Evaluation Summary

Proposed changes to Federal regulations must undergo several economic analyses. First, Executive Order 12866 directs that each Federal agency shall propose or adopt a regulation only upon a reasoned determination that the benefits of the intended regulation justify its costs. Second, the Regulatory Flexibility Act of 1980 requires agencies to analyze the economic effect of regulatory changes on small entities. Third, the Trade Agreements Act (19 U.S.C. section 2531–2533) prohibits agencies from setting standards that create unnecessary obstacles to the foreign commerce of the United States. In developing U.S. standards, this Trade Act also requires the consideration of international standards and, where appropriate, that they be the basis of U.S. standards. And fourth, the Unfunded Mandates Reform Act of 1995 requires agencies to prepare a written assessment of the costs, benefits, and other effects of proposed or final rules that include a Federal mandate likely to result in the expenditure by State, local, or tribal governments, in the aggregate, or by the private sector of $100 million or more annually (adjusted for inflation).

The FAA has determined that this proposal has minimal costs, and that it is neither ''a significant regulatory action'' as defined in Executive Order 12866, nor ''significant'' as defined in DOT's Regulatory Policies and Procedures. Further, this proposed rule

would not have a significant economic impact on a substantial number of small entities, would reduce barriers to international trade, and would not impose an Unfunded Mandate on state, local, or tribal governments, or on the private sector.

The DOT Order 2100.5 prescribes policies and procedures for simplification, analysis, and review of regulations. If it is determined that the expected impact is so minimal that the proposed rule does not warrant a full evaluation, a statement to that effect and the basis for it is included in the proposed regulation. Accordingly, the FAA has determined that the expected impact of this proposed rule is so minimal that the proposed rule does not warrant a full evaluation. We provide the basis for this determination as follows.

Currently, airplane manufacturers must satisfy both part 25 and the European JAR–25 standards to certificate transport category aircraft in both the United States and Europe. Meeting two sets of certification requirements raises the cost of developing a new transport category airplane often with no increase in safety. In the interest of fostering international trade, lowering the cost of aircraft development, and making the certification process more efficient, the FAA, JAA, and aircraft manufacturers have been working to create, to the maximum possible extent, a single set of certification requirements accepted in both the United States and Europe. As explained in detail previously, these efforts are referred to as ''harmonization.''

The proposed rule would amend the current fuselage door standard contained in 14 CFR part 25 with a new improved door standard. This new standard would set forth, as a regulatory requirement, some of the existing technical guidance criteria that have been determined to be necessary for safety but which, up to this point, have not been included in the regulations. In addition, the proposed rule addresses recommendations from the NTSB and the Air Transport Association (ATA) task force on doors.

If adopted, the proposal would harmonize the FAA and JAA requirements for fuselage doors. Adopting this proposal would also relieve a certification burden on industry by eliminating regulatory differences between the airworthiness standards and related guidance material of the United States and Europe.

Costs of the Proposed Rule

The FAA identified only one section, 25.783(b), of the proposed rule where manufacturers indicated that a measurable cost would exist. For the other proposed changes, the FAA has not made specific cost estimates but has provided qualitative cost indications.

1. *Paragraph 25.783(a)* is descriptive and has no expected cost.

2. *Paragraph 25.783(b)* relates to opening by persons. The requirement to consider deliberate opening is new, but is expected to be accommodated in existing design practices for all but one United States manufacturer. (Requirements regarding inadvertent opening are not new). One manufacturer would incur an estimated cost of $0.75 million, which would include the requirements for the prevention of intentional opening of the doors.

3. *Paragraph 25.783(c)* covers means to prevent pressurization. The requirement to consider single failures in the pressurization-inhibit system is new, but is believed to be industry practice. Thus, there is likely to be very little, if any, cost for a new design. The provision to permit certain doors to forego this system is actually cost-relieving, and could result in a minor cost reduction in some cases.

4. *Paragraph 25.783(d)* covers latching and locking. Most of these changes are the incorporation of recommendations currently contained in an advisory circular. The vast majority of airplanes already comply, and basic design practice is to comply with these requirements. Therefore, these requirements, while new, should have minimal cost impact. The requirement for each latch to have a lock, which must monitor the latch position, is a formalization of existing practice. The requirement to eliminate forces in the latching mechanism that could load the locks is new, and may not be complied with in all cases currently . The FAA believes that these costs are minimal.

5. *Paragraph 25.783(e)* covers warning, caution, and advisory indications. The reliability of the door indication system would be required to be higher for all doors. This would have only a small cost impact, as would the requirement for an aural warning for certain doors, and the requirement to provide an indication to the door operator.

6. *Paragraph 25.783(f)* contains the visual inspection provision requirement. The requirement for direct visual inspection is extended to more door types, and may add costs in some cases.

7. *Paragraph 25.783(g)* deals with certain maintenance doors, removable emergency exits, and access panels. The current rule does not provide the relief that the proposed rule does, although the AC has indicated that relief is possible. This provision could reduce costs in some cases.

8. *Paragraph 25.783(h)* covers doors that are not a hazard and is intended to provide relief for certain doors, so it could reduce costs.

9. *Paragraphs 25.783(i), 25.783(j), 25.809(b), 25.809(c), and 25.809(f)* move text to another section.

10. *Paragraph 25.807* simply corrects an unintended deletion.

Summary of Benefit and Cost Considerations

The proposed rule is expected to:

- Maintain or provide a slight increase in the level of safety,
- Have only a relatively small effect on costs when compared to current industry practice, and
- Provide some cost savings to manufacturers by avoiding duplicative testing and reporting that could result from the existence of differing requirements under the current standards.

This rule would codify existing guidance, standard industry practice, and industry recommendations for the design standards for fuselage doors, which would prevent a reoccurrence of the 1974 accident. The FAA believes that the cost savings from a single certification requirement exceed the minimal additional compliance cost. The FAA therefore considers that the proposed rule would be cost-beneficial. This is reinforced by industry's support for the proposal. We invite comments on the effects of this proposed regulation. We would particularly appreciate relevant quantitative data relating to any additional costs (or reductions in costs) believed likely to result from the proposed rule. The costs of interest are the increases or decreases, compared to costs associated with what is believed likely to be industry practice in the absence of the proposed rule.

Initial Regulatory Flexibility Determination

The Regulatory Flexibility Act (RFA) of 1980, 50 U.S.C. 601–612, as amended, establishes ''as a principle of regulatory issuance that agencies shall endeavor, consistent with the objective of the rule and of applicable statutes, to fit regulatory and informational requirements to the scale of the business, organizations, and governmental jurisdictions subject to regulation.'' To achieve that principle,

the RFA requires agencies to solicit and consider flexible regulatory proposals and to explain the rationale for their actions. The Act covers a wide range of small entities, including businesses and governments.

Agencies must perform a review to determine whether a proposed or final rule will have a significant impact on a substantial number of small entities. If the determination is that the rule will, the Agency must prepare a regulatory flexibility analysis as described in the RFA.

If, however, an agency determines that a proposed or final rule is not expected to have a significant economic impact on a substantial number of small entities, section 605(b) of the RFA provides that the head of the agency may so certify and a regulatory flexibility analysis is not required. The certification must include a statement providing the factual basis for this determination, and the reasoning should be clear.

The FAA considers that this proposed rule would not have a significant impact on a substantial number of small entities for two reasons:

First, the proposed rule is expected to provide relief from some regulatory costs. The proposed rule would require that manufacturers of transport category aircraft meet a single certification requirement, rather than different standards for the United States and Europe. Manufacturers of the affected airplanes are believed to already meet most standards that would be required by the proposed rule, or expect to meet most of these standards.

Second, all affected U.S. transport-aircraft category manufacturers exceed the Small Business Administration small-entity criterion of 1,500 employees for aircraft manufacturers, as published by the Small Business Administration in 13 CFR part 121, Small Business Size Regulations; Size Standards, (65 FR 53533, September 5, 2000). The current U.S. part 25 airplane manufacturers include: Boeing, Cessna Aircraft, Gulfstream Aerospace, Learjet (owned by Bombardier), Lockheed Martin, McDonnell Douglas (a wholly-owned subsidiary of The Boeing Company), Raytheon Aircraft, and Sabreliner Corporation. All of these manufacturers have more than 1,500 employees and therefore do not qualify as small entities.

Since there are no affected small entity manufacturers of the airplanes covered by the proposed rule, the FAA certifies that this proposed rule would not have a significant economic impact on a substantial number of small entities.

International Trade Impact Assessment

The Trade Agreement Act of 1979 prohibits Federal agencies from engaging in any standards or related activities that create unnecessary obstacles to the foreign commerce of the United States. Legitimate domestic objectives, such as safety, are not considered unnecessary obstacles. The statute also requires consideration of international standards and, where appropriate, that they be the basis for U.S. standards.

In accordance with the above statute, the FAA has assessed the potential effect of this proposed rule and has determined that it would reduce trade barriers by narrowing the differences between U.S. standards and European international standards.

Unfunded Mandates Reform Act

Title II of the Unfunded Mandates Reform Act of 1995 (the Act), codified in 2 U.S.C. 1532–1538, enacted as Public Law 104–4 on March 22, 1995, requires each Federal agency, to the extent permitted by law, to prepare a written assessment of the effects of any Federal mandate in a proposed or final agency rule that may result in the expenditure by State, local, and tribal governments, in the aggregate, or by the private sector, of $100 million or more (adjusted annually for inflation) in any one year.

This proposed rule does not contain a Federal intergovernmental or private sector mandate that exceeds $100 million in any year; therefore, the requirements of the Act do not apply.

What Other Assessments Has the FAA Conducted?

Executive Order 13132, Federalism

The FAA has analyzed this proposed rule under the principles and criteria of Executive Order 13132, Federalism. We determined that this action would not have a substantial direct effect on the States, on the relationship between the national Government and the States, or on the distribution of power and responsibilities among the various levels of government. We therefore determined that this notice of proposed rulemaking would not have federalism implications.

Paperwork Reduction Act

The Paperwork Reduction Act of 1995 (44 U.S.C. 3507(d)) requires that the FAA consider the impact of paperwork and other information collection burdens imposed on the public. We have determined that there are no new information collection requirements associated with this proposed rule.

International Compatibility

In keeping with U.S. obligations under the Convention on International Civil Aviation, it is the FAA's policy to comply with International Civil Aviation Organization (ICAO) Standards and Recommended Practices to the maximum extent practicable. We have determined that there are no ICAO Standards and Recommended Practices that correspond to this proposed regulation.

Environmental Analysis

FAA Order 1050.1D defines the FAA actions that may be categorically excluded from preparation of a National Environmental Policy Act (NEPA) environmental impact statement. In accordance with the FAA Order 1050.1D, appendix 4, paragraph 4(j), this proposed rulemaking action qualifies for a categorical exclusion.

Energy Impact

The energy impact of the proposed rule has been assessed in accordance with the Energy Policy and Conservation Act (EPCA) and Public Law 94–163, as amended (43 U.S.C. 6362), and the FAA Order 1053.1. It has been determined that it is not a major regulatory action under the provisions of the EPCA.

Regulations Affecting Intrastate Aviation in Alaska

Section 1205 of the FAA Reauthorization Act of 1996 (110 Stat. 3213) requires the Administrator, when modifying regulations in Title 14 of the CFR in a manner affecting intrastate aviation in Alaska, to consider the extent to which Alaska is not served by transportation modes other than aviation, and to establish such regulatory distinctions as he or she considers appropriate. Because this proposed rule would apply to the certification of future designs of transport category airplanes and their subsequent operation, it could, if adopted, affect intrastate aviation in Alaska. The FAA therefore specifically requests comments on whether there is justification for applying the proposed rule differently to intrastate operations in Alaska.

Plain Language

In response to the June 1, 1998, Presidential memorandum regarding the issue of plain language, the FAA re-examined the writing style currently used in the development of regulations. The memorandum requires Federal agencies to communicate clearly with the public. We are interested in your comments on whether the style of this

document is clear, and in any other suggestions you might have to improve the clarity of FAA communications that affect you. You can get more information about the Presidential memorandum and the plain language initiative at *http://www.plainlanguage.gov.*

List of Subjects in 14 CFR Part 25

Aircraft, Aviation safety, Recording and recordkeeping requirements.

The Proposed Amendment

In consideration of the foregoing, the Federal Aviation Administration proposes to amend part 25 of Title 14, Code of Federal Regulations, as follows:

PART 25—AIRWORTHINESS STANDARDS: TRANSPORT CATEGORY AIRPLANES

1. The authority citation for part 25 continues to read as follows:

Authority: 49 U.S.C. 106(g), 40113, 44701–44702, and 44704.

2. Section 25.783 is revised to read as follows:

§ 25.783 Fuselage doors.

(a) *General.* This section applies to fuselage doors, which includes all doors, hatches, openable windows, access panels, covers, etc., on the exterior of the fuselage that do not require the use of tools to open or close. This also applies to each door or hatch through a pressure bulkhead, including any bulkhead that is specifically designed to function as a secondary bulkhead under the prescribed failure conditions of part 25. These doors must meet the requirements of this section, taking into account both pressurized and unpressurized flight, and must be designed as follows:

(1) Each door must have means to safeguard against opening in flight as a result of mechanical failure, or failure of each single structural element.

(2) Each door that could be a hazard if it unlatches must be designed so that opening during pressurized and unpressurized flight from the fully closed, latched, and locked condition is extremely improbable. This must be shown by safety analysis.

(3) Each element of each door operating system must be designed or, where impracticable, distinctively and permanently marked, to minimize the probability of incorrect assembly and adjustment that could result in a malfunction.

(4) All sources of power that could initiate unlocking or unlatching of each door must be automatically isolated from the latching and locking systems prior to flight and it must not be possible to restore power to the door during flight.

(5) Each removable bolt, screw, nut, pin, or other removable fastener must meet the locking requirements of § 25.607.

(6) Certain doors, as specified by § 25.807(h), must also meet the applicable requirements of §§ 25.809 through 25.812 for emergency exits.

(b) *Opening by persons.* There must be a means to safeguard each door against opening during flight due to inadvertent action by persons. In addition, design precautions must be taken to minimize the possibility for a person to open a door intentionally during flight. If these precautions include the use of auxiliary devices, those devices and their controlling systems must be designed so that:

(1) no single failure will prevent more than one exit from being opened, and

(2) failures that would prevent opening of the exit after landing are improbable.

(c) *Pressurization prevention means.* There must be a provision to prevent pressurization of the airplane to an unsafe level if any door subject to pressurization is not fully closed, latched, and locked.

(1) The provision must be designed to function after any single failure, or after any combination of failures not shown to be extremely improbable.

(2) Doors that meet the conditions described in paragraph (h) of this section are not required to have a dedicated pressurization prevention means if, from every possible position of the door, it will remain open to the extent that it prevents pressurization or safely close and latch as pressurization takes place. This must also be shown with each single failure and malfunction, except that:

(i) with failures or malfunctions in the latching mechanism, it need not latch after closing, and

(ii) with jamming as a result of mechanical failure or blocking debris, the door need not close and latch if it can be shown that the pressurization loads on the jammed door or mechanism would not result in an unsafe condition.

(d) *Latching and locking.* The latching and locking mechanisms must be designed as follows:

(1) There must be a provision to latch each door.

(2) The latches and their operating mechanism must be designed so that, under all airplane flight and ground loading conditions, with the door latched, there is no force or torque tending to unlatch the latches. In addition, the latching system must include a means to secure the latches in the latched position. This means must be independent of the locking system.

(3) Each door subject to pressurization, and for which the initial opening movement is not inward, must—

(i) have an individual lock for each latch,

(ii) have the lock located as close as practicable to the latch, and

(iii) be designed so that, during pressurized flight, no single failure in the locking system would prevent the locks from restraining the latches as necessary to secure the door.

(4) Each door for which the initial opening movement is inward, and unlatching of the door could result in a hazard, must have a locking means to prevent the latches from becoming disengaged. The locking means must ensure sufficient latching to prevent opening of the door even with a single failure of the latching mechanism.

(5) It must not be possible to position the lock in the locked position if the latch and the latching mechanism are not in the latched position.

(6) It must not be possible to unlatch the latches with the locks in the locked position. Locks must be designed to withstand the limit loads resulting from—

(i) the maximum operator effort when the latches are operated manually;

(ii) the powered latch actuators, if installed; and

(iii) the relative motion between the latch and the structural counterpart.

(7) Each door for which unlatching would not result in a hazard is not required to have a locking mechanism meeting the requirements of paragraphs (d)(3) through (d)(6) of this section.

(e) *Warning, caution, and advisory indications.* Doors must be provided with the following indications:

(1) There must be a positive means to indicate at the door operator's station for each door that all required operations to close, latch, and lock the door have been completed.

(2) There must be a positive means clearly visible from the operator station for each door to indicate if the door is not fully closed, latched, and locked for each door that could be a hazard if unlatched.

(3) There must be a visual means on the flight deck to signal the pilots if any door is not fully closed, latched, and locked. The means must be designed such that any failure or combination of failures that would result in an erroneous closed, latched, and locked indication is improbable for—

(i) each door that is subject to pressurization and for which the initial opening movement is not inward, or

(ii) each door that could be a hazard if unlatched.

(4) There must be an aural warning to the pilots prior to or during the initial portion of takeoff roll if any door is not fully closed, latched, and locked, and its opening would prevent a safe takeoff and return to landing.

(f) *Visual inspection provision.* Each door for which unlatching could be a hazard must have a provision for direct visual inspection to determine, without ambiguity, if the door is fully closed, latched, and locked. The provision must be permanent and discernible under operational lighting conditions, or by means of a flashlight or equivalent light source.

(g) *Certain maintenance doors, removable emergency exits, and access panels.* Some doors not normally opened except for maintenance purposes or emergency evacuation and some access panels need not comply with certain paragraphs of this section as follows:

(1) Access panels that are not subject to cabin pressurization and would not be a hazard if open during flight need not comply with paragraphs (a) through (f) of this section, but must have a means to prevent inadvertent opening during flight.

(2) Inward-opening removable emergency exits that are not normally removed, except for maintenance purposes or emergency evacuation, and flight deck-openable windows need not comply with paragraphs (c) and (f) of this section.

(3) Maintenance doors that meet the conditions of paragraph (h) of this section, and for which a placard is provided limiting use to maintenance access, need not comply with paragraphs (c) and (f) of this section.

(h) *Doors that are not a hazard.* For the purposes of this section, a door is considered not to be a hazard in the unlatched condition during flight, provided it can be shown to meet all of the following conditions:

(1) Doors in pressurized compartments would remain in the fully closed position if not restrained by the latches when subject to a pressure greater than ½ psi. Opening by persons, either inadvertently or intentionally, need not be considered in making this determination.

(2) The door would remain inside the airplane or remain attached to the airplane if it opens either in pressurized or unpressurized portions of the flight. This determination must include the consideration of inadvertent and intentional opening by persons during either pressurized or unpressurized portions of the flight.

(3) The disengagement of the latches during flight would not allow depressurization of the cabin to an unsafe level. This safety assessment must include the physiological effects on the occupants.

(4) The open door during flight would not create aerodynamic interference that could preclude safe flight and landing.

(5) The airplane would meet the structural design requirements with the door open. This assessment must include the aeroelastic stability requirements of § 25.629, as well as the strength requirements of this subpart.

(6) The unlatching or opening of the door must not preclude safe flight and landing as a result of interaction with other systems or structures.

3. Amend § 25.807 by revising paragraph (h) to read as follows:

§ 25.807 Emergency exits.

* * * * *

(h) *Other exits.* The following exits also must meet the applicable emergency exit requirements of §§ 25.809 through 25.812, and must be readily accessible:

(1) Each emergency exit in the passenger compartment in excess of the minimum number of required emergency exits.

(2) Any other floor-level door or exit that is accessible from the passenger compartment and is as large or larger than a Type II exit, but less than 46 inches wide.

(3) Any other ventral or tail cone passenger exit.

* * * * *

4. Amend § 25.809 by adding a new paragraph (b)(3) and by revising paragraphs (c) and (f) to read as follows:

§ 25.809 Emergency exit arrangement.

* * * * *

(b) * * *

(3) Even though persons may be crowded against the door on the inside of the airplane.

(c) The means of opening emergency exits must be simple and obvious; may not require exceptional effort; and must be arranged and marked so that it can be readily located and operated, even in darkness. Internal exit-opening means involving sequence operations (such as operation of two handles or latches, or the release of safety catches) may be used for flightcrew emergency exits if it can be reasonably established that these means are simple and obvious to crewmembers trained in their use.

* * * * *

(f) Each door must be located where persons using them will not be endangered by the propellers when appropriate operating procedures are used.

* * * * *

5. Amend § 25.810 by adding a new paragraph (e) to read as follows:

§ 25.810 Emergency egress assist means and escape routes.

* * * * *

(e) If an integral stair is installed in a passenger entry door that is qualified as a passenger emergency exit, the stair must be designed so that, under the following conditions, the effectiveness of passenger emergency egress will not be impaired:

(1) The door, integral stair, and operating mechanism have been subjected to the inertia forces specified in § 25.561(b)(3), acting separately relative to the surrounding structure.

(2) The airplane is in the normal ground attitude and in each of the attitudes corresponding to collapse of one or more legs of the landing gear.

* * * * *

6. Add a new § 25.820 to read as follows:

§ 25.820 Lavatory doors.

All lavatory doors must be designed to preclude anyone from becoming trapped inside the lavatory. If a locking mechanism is installed, it must be capable of being unlocked from the outside without the aid of special tools.

Issued in Renton, Washington, on December 20, 2002.

Vi L. Lipski,

Manager, Transport Airplane Directorate, Aircraft Certification Service.

[FR Doc. 03–581 Filed 1–13–03; 8:45 am]

BILLING CODE 4910–13–P

the OMB clearance package by calling the SSA Reports Clearance Officer at 410–965–0454 or by writing to the address listed above.

Instructions for Completion of Federal Assistance Application—0960–0184. The information on Form SSA–96 will be used to assist SSA in selecting grant proposals for funding based on their technical merits. The information will also assist in evaluating the soundness of the design of the proposed activities, the possibilities of obtaining productive results, the adequacy of resources to conduct the activities and the relationship to other similar activities that have been or are being conducted. The respondents are State and local governments, State-designated protection and advocacy groups, colleges and universities and profit and nonprofit private organizations.

Type of Request: Extension of an OMB-approved Information Collection.

Number of Respondents: 200.

Frequency of Response: 8.

Average Burden Per Response: 14 hours.

Estimated Annual Burden: 22,400 hours.

Dated: March 6, 2003.

Elizabeth A. Davidson,

Reports Clearance Officer, Social Security Administration.

[FR Doc. 03–5789 Filed 3–11–03; 8:45 am]

BILLING CODE 4191–02–P

DEPARTMENT OF TRANSPORTATION

Office of the Secretary

Reports, Forms and Recordkeeping Requirements; Agency Information Collection Activity Under OMB Review

AGENCY: Office of the Secretary, Department of Transportation (DOT).

ACTION: Notice.

SUMMARY: In compliance with the Paperwork Reduction Act of 1995 (44 U.S.C. 3501 *et seq.*), this notice announces that the Information Collection Request (ICR) abstracted below has been forwarded to the Office of Management and Budget (OMB) for renewal and comment. The ICR describes the nature of the information collection and its expected cost and burden. The **Federal Register** Notice with a 60-day comment period soliciting comments on the following collection of information was published on December 24, 2002 [67 FR 78558]. No comments were received.

DATES: Comments must be submitted on or before April 11, 2003 to: Attention DOT/OST Desk Officer, Office of Information and Regulatory Affairs, Office of Management and Budget, Docket Library, Room 10102, 725 17th Street, NW., Washington, DC 20503.

FOR FURTHER INFORMATION CONTACT: Mr. Robert C. Ashby, Office of the Secretary, Office of Assistant General Counsel for Regulation and Enforcement, Department of Transportation, 400 Seventh St., SW., Washington, DC 20590, Telephone (202) 366–9310, (voice) 202–366–9313 (fax) or at *bob.ashby@ost.dot.gov.*

SUPPLEMENTARY INFORMATION: Office of the Secretary (OST)

Title: Report of DBE Awards and Commitments.

OMB Control Number: 2105–0510.

Annual Estimated Burden: 1.46 million hours.

Type of Request: Extension of a currently approved information collection.

Comments are invited on: Whether the proposed collection of information is necessary for the proper performance of the functions of the Department, including whether the information will have practical utility; the accuracy of the Department's estimate of the burden of the proposed information collection; ways to enhance the quality, utility, and clarity of the information to be collected; and ways to minimize the burden of the collection of information on respondents, including the use of automated collection techniques or other forms of information technology.

Issued in Washington, DC on March 5, 2003.

Michael A. Robinson,

Clearance Officer, Department of Transportation.

[FR Doc. 03–5882 Filed 3–11–03; 8:45 am]

BILLING CODE 4910–62–P

DEPARTMENT OF TRANSPORTATION

Office of the Secretary

Meeting of the Transportation Labor-Management Board

AGENCY: Office of the Secretary, Department of Transportation.

ACTION: Notice of meeting.

SUMMARY: The U.S. Department of Transportation (DOT) announces a meeting of the Transportation Labor-Management Board (Board). Notice of the meeting is required under the Federal Advisory Committee Act.

Time and Place: The Board will meet on Wednesday, March 26, 2003, at 9 a.m., at the U.S. Department of Transportation, Nassif Building, room 7418, 400 Seventh Street, SW., Washington, DC 20590. The room is located on the 7th floor.

Type of Meeting: The meeting is open to the public. Please note that visitors without a government identification badge should enter the Nassif Building at the Southwest lobby, for clearance at the Visitor's Desk. Seating will be available on a first-come, first-served basis. Handicapped individuals wishing to attend should contact DOT to obtain appropriate accommodations.

Point of Contact: Stephen Gomez, U.S. Department of Transportation, Office of the Secretary, Workforce Environment and Pay Division, M–13, Nassif Building, 400 Seventh Street, SW., room 7411, Washington, DC 20590, (202) 366–9455.

SUPPLEMENTARY INFORMATION: The purpose of this meeting is to determine the issues the Board will address, establish priorities, and review the revised Transportation Labor-Management Board Charter.

Public Participation: We invite interested persons and organizations to submit comments. Mail or deliver your comments or recommendations to Stephen Gomez at the address shown above. Comments should be received by March 18, 2003 in order to be considered at the March 26th meeting.

Issued in Washington, DC, on March 6, 2003.

For the U.S. Department of Transportation.

Linda Moody,

Associate Director, Workforce Environment and Pay Division.

[FR Doc. 03–5921 Filed 3–11–03; 8:45 am]

BILLING CODE 4910–62–P

DEPARTMENT OF TRANSPORTATION

Federal Aviation Administration

Proposed Revisions to Advisory Circular 25.783–1, Fuselage Doors and Hatches

AGENCY: Federal Aviation Administration (FAA), DOT.

ACTION: Notice of proposed advisory circular and request for comments.

SUMMARY: The Federal Aviation Administration invites public comment on proposed revisions to Advisory Circular, AC 25.783–1, ''Fuselage Doors and Hatches.'' The revised advisory circular provides guidance for demonstrating compliance with proposed revisions to the design standards for fuselage doors and hatches, published earlier this year. This notice provides interested persons an opportunity to comment on the

revised advisory material concurrent with the proposed rule.

DATES: Comments must be received on or before April 14, 2003.

ADDRESSES: You should send your comments to the Federal Aviation Administration, Transport Airplane Directorate, Attention: Jeff Gardlin, Airframe/Cabin Safety Branch, ANM–115, Transport Airplane Directorate, Aircraft Certification Service, 1601 Lind Avenue, SW., Renton, Washington 98055–4056. You may also fax your comments to 425–227–1149, or you may send your comments electronically to: *jeff.gardlin@faa.gov.* You may review all comments received at the above address between 7:30 a.m. and 4 p.m. weekdays, except Federal holidays.

FOR FURTHER INFORMATION CONTACT: Jeff Gardlin at the above address, telephone 425–227–2136.

SUPPLEMENTARY INFORMATION:

How Do I Obtain a Copy of the Proposed Advisory Circular?

You may obtain an electronic copy of the proposed advisory circular at the following Internet address: *http://www.airweb.faa.gov/DraftAC.* If you do not have access to the Internet, you may request a copy by contacting Jeff Gardlin at the address or phone number listed earlier in this announcement.

How Do I submit Comments on the Proposed Advisory Circular?

You are invited to comment on the proposed AC by submitting written comments, data, or views. You must identify the AC by title and submit your comments in duplicate to the address specified above. We will consider all comments received on or before the closing date for comments before issuing the final AC.

Discussion

By separate notice publish in the **Federal Register** (68 FR 1932, January 14, 2003), the FAA proposes to amend the design standards for fuselage doors on transport category airplanes. Currently, most of the relevant standards are found in title 14, Code of Federal Regulations (CFR), § 25.783, ''Doors.'' The proposed revision would improve door integrity by providing design standards that would ensure that doors remain secure under all circumstances that service experience has shown can occur.

We prepared a proposed revision to AC 25.783–1, ''Fuselage Doors and Hatches,'' to provide guidance on one means of showing compliance with the proposed revised requirements of § 25.783. The means of compliance described in the proposed AC provides guidance to supplement the engineering and operational judgment that must form the basis fo any compliance findings on the structural and functional safety standards for doors and their operating systems.

Harmonization of Standards and Guidance

The proposed AC is based on recommendations submitted to the FAA by the Aviation Rulemaking Advisory Committee (ARAC). The FAA tasked ARAC (63 FR 50954, September 23, 1998) to provide advice and recommendations on ''harmonizing'' certain sections of part 25 with the counterpart standards contained in Joint Aviation Requirements (JAR) 25. The goal of ''harmonization tasks,'' such as this, is to ensure that:

- Where possible, standards and guidance do not require domestic and foreign parties to manufacture or operate to different standards for each country involved; and
- The standards and guidance adopted are mutually acceptable to the FAA and the foreign aviation authorities.

The guidance contained in the proposed AC has been harmonized with that of the JAA, and provides a method of compliance that has been found acceptable to both the FAA and JAA.

The FAA is making the AC available as it was recommended from the Aviation Rulemaking Advisory Committee. However, certain events subsequent to the recommendation being received by the FAA have raised concerns regarding the guidance contained in paragraph 9b(2) with regard to differential pressures under which doors can be opened. Therefore, the FAA specifically invites comments on this aspect of the guidance.

Issuance of the revised AC is contingent on final adoption of the proposed changes to the relevant regulations.

Issued in Renton, Washington, on March 3, 2003.

Ali Bahrami,

Acting Manager, Transport Airplane Directorate, Aircraft Certification Service.

[FR Doc. 03–5932 Filed 3–11–03; 8:45 am]

BILLING CODE 4910–13–M

DEPARTMENT OF TRANSPORTATION

Federal Aviation Administration

Proposed Revised Advisory Circular (AC) 121.445–1E, Pilot-in-Command Qualifications for Special Airports, 14 CFR Part 121, Section 121.445

AGENCY: Federal Aviation Administration (FAA), DOT.

ACTION: Notice of availability of proposed revised AC and request for comments.

SUMMARY: The proposed AC provides information for all title 14 of the Code of Federal Regulations (14 CFR) part 119 certificate holders who conduct operations under 14 CFR part 121 concerning those airports where the Administrator has determined that special qualifications are required of pilots-in-command as provided in part 121, section 121.445. Additionally, this AC provides a suggested format for certificate holders, their pilots, and other persons to use to assess whether an individual airport should be designated as a special qualification airport.

DATES: Comments must be received on or before April 11, 2003.

ADDRESSES: Send all comments on the proposed AC to: Federal Aviation Administration, Air Carrier Operations Branch, AFS–220, 800 Independence Avenue, SW., Washington, DC 20591.

Comments Invited: A copy of the proposed AC can be found at the following Web address: *http://www.opspecs.com/ops/default.htm.* Additionally, a paper copy of the draft AC can be obtained by contacting AFS–220 at the above address. Comments are invited on all aspects of the proposed AC. Commenters should note that there are several new airports added to this AC (as indicated by the effective date) and one airport removed (Marquette, Michigan). When submitting comments to AFS–220, commenters must identify file number AC 121.445–1E. Comments may be inspected at the above address between 8 a.m. and 3 p.m. e.s.t. on weekdays, except Federal holidays.

FOR FURTHER INFORMATION CONTACT: Thomas Penland, AFS–220, at the above address or telephone at (202) 267–8166.

Issued in Washington, DC, on March 4, 2003.

Louis C. Cusimano,

Deputy Director, Flight Standards Service.

[FR Doc. 03–5935 Filed 3–11–03; 8:45 am]

BILLING CODE 4910–13–M