Federal Aviation Administration – Regulations and Policies
Aviation Rulemaking Advisory Committee

General Aviation Certification and Operations Issue Area
JAR/FAR 23 Harmonization Working Group

Task 5 – Airframe

Task Assignment

Federal Aviation Administration

Aviation Rulemaking Advisory Committee; General Aviation and Business Airplane Subcommittee: JAR/FAR 23 Harmonization Working Group

AGENCY: Federal Aviation Administration (FAA), DOT.

ACTION: Notice of establishment of JAR/FAR 23 Harmonization Working Group.

SUMMARY: Notice is given of the establishment of the JAR/FAR 23 Harmonization Working Group by the General Aviation and Business Airplane Subcommittee. This notice informs the public of the activities of the General Aviation and Business Airplane Subcommittee of the Aviation Rulemaking Advisory Committee.

FOR FURTHER INFORMATION CONTACT: Mr. William J. (Joe) Sullivan, Executive Director, General Aviation and Business Airplane Subcommittee, Aircraft Certification Service (AIR-3), 800 Independence Avenue, SW., Washington, DC 20591, telephone: (202) 267-9554; FAX: (202) 267-9562.

SUPPLEMENTARY INFORMATION: The Federal Aviation Administration (FAA) established an Aviation Rulemaking Advisory Committee (56 FR 2190, January 22, 1991) which held its first meeting on May 23, 1991 (56 FR 20492, May 3, 1991). The General Aviation and Business Airplane Subcommittee was established at that meeting to provide advice and recommendations to the Director, Aircraft Certification Service, FAA, regarding the airworthiness standards for standard and commuter category airplanes and engines in part 23 of the Federal Aviation Regulations, and parallel provisions of parts 91 and 135 of the Federal Aviation Regulations.

The FAA announced at the Joint Aviation Authorities (JAA)-Federal Aviation Administration (FAA) Harmonization Conference in Toronto, Ontario, Canada, (June 2-5, 1992) that it would consolidate within the Aviation Rulemaking Advisory Committee structure an ongoing objective to "harmonize" the Joint Aviation Requirements (JAR) and the Federal Aviation Regulations (FAR). Coincident with that announcement, the FAA assigned to the General Aviation and Business Airplane Subcommittee those rulemaking projects related to JAR/FAR 23 Harmonization which were then in the process of being coordinated between the JAA and the FAA. The Harmonization process included the intention to present the results of JAA/FAA coordination to the public in the form of a Notice of Proposed Rulemaking—an objective comparable to and compatible with that assigned to the Aviation Rulemaking Advisory Committee. The General Aviation and Business Airplane Subcommittee, consequently, established the JAR/FAR 23 Harmonization Working Group.

Specifically, the Working Group's tasks are the following: The JAR/FAR 23 Harmonization Working Group is charged with making recommendations to the General Aviation and Business Airplane Subcommittee concerning the FAA disposition of the following rulemaking subjects recently coordinated between the JAA and the FAA:

Task 1-Review JAR Issues: Review JAR 23 Issue No. 4 (which excludes commuter category airplanes) and No. 5 (which includes commuter category airplanes), and compare them with Amendment 23-42 to FAR 23, and the proposals in Notices 3 and 4 from the Part 23 Airworthiness Review. Identify technical differences between JAR 23 and FAR 23 which can be harmonized.

Task 2-Systems and Equipment: Based on the results of the Task 1 review, identify the changes to Subparts D and F of FAR 23 that are appropriate for harmonization, and those provisions that should not be harmonized, if any.

Task 3-Powerplant: Based on the results of the Task 1 review, identify the changes to Subpart E of FAR 23 that are appropriate for harmonization, and those provisions that should not be harmonized, if any.

Task 4-Flight Test: Based on the results of the Task 1 review, identify the changes to Subparts A, B and G of FAR 23 that are appropriate for harmonization, and those provisions that should not be harmonized, if any.

Task 5-Airframe: Based on the results of the Task 1 review, identify the changes to Subparts C and D of FAR 23 that are appropriate for harmonization, and those provisions that should not be harmonized, if any.

Reports

A. Recommend time line(s) for completion of each task, including rationale, for Subcommittee consideration at the meeting of the subcommittee held following publication of this notice.

B. Give a detailed presentation to the subcommittee of the results of Task 1 before proceeding with Tasks 2-5.

C. Give a detailed conceptual presentation on Tasks 2-5 to the Subcommittee before proceeding with the work stated under item D, below. Each presentation should identify what proposed amendments will be included in each notice, and whether any additional notices will be need to be drafted in addition to the four identified in item D, below. These reports may be combined or presented separately at the discretion of the working group chair.

D. Draft a separate Notice of Proposed Rulemaking for Tasks 2-5 proposing new or revised requirements, a supporting economic analysis, and other required analysis, with any other collateral documents (such as Advisory Circulars) the Working Group determines to be needed.

E. Give a status report on each task at each meeting of the Subcommittee.

The JAR/FAR 23 Harmonization Working Group will be comprised of experts from those organizations having an interest in the task assigned to it. A working group member need not necessarily be a representative of one of the organizations of the parent General Aviation and Business Airplane Subcommittee or of the full Aviation Rulemaking Advisory Committee. An individual who has expertise in the subject matter and wishes to become a member of the working group should *write* the person listed under the caption "FOR FURTHER INFORMATION CONTACT" expressing that desire, describing his or her interest in the task, and the expertise he or she would bring to the working group. The request will be reviewed with the subcommittee chair and working group leader, and the individual advised whether or not the request can be accommodated.

The Secretary of Transportation has determined that the information and use of the Aviation Rulemaking Advisory Committee and its subcommittees are necessary in the public interest in connection with the performance of duties imposed on the FAA by law. Meetings of the full committee and any subcommittees will be open to the public except as authorized by section 10(d) of the Federal Advisory Committee Act. Meetings of the JAR/FAR 23 Harmonization Working Group will not be open to the public, except to the extent that individuals with an interest and expertise are selected to participate. No public announcement of working group meetings will be made.

Issued in Washington, DC, on November 19, 1992.

William J. Sullivan,

Executive Director, General Aviation and Business Airplane Subcommittee, Aviation Rulemaking Advisory Committee.

[FR Doc. 92-28931 Filed 11-27-92; 8:45 am]

BILLING CODE 4910-13-M

Recommendation Letter

Action:

Mr. Anthony Broderick
Associate Administration for Regulation
and Certification-AVR-1
Federal Aviation Administration
800 Independence Ave.
Washington DC, 20591

208 Patterson St.
Falls Church, VA 22046

March 1, 1994

Dear Mr. Broderick:

The ARAC, General Aviation and Business Aircraft Issues Group met on February 8, 1994. It was the group recommendation that the enclosed Airframe, Flight, Powerplant and Systems JAR/FAR 23 Harmonization Draft Notices should be forwarded to FAA Washington for publication. Each notice has been reviewed and endorsed by FAA Kansas City and Washington Legal and is accompanied by an executive summary and economic analysis prepared by FAA.

Also enclosed is a JAA letter to FAA dated January 20, 1994 to which is attached a table indicating the European study group disposition concerning text differences between JAR and FAR 23 following their review of notices 3 and 4 and the associated four draft harmonization notices. The FAA responses to the items listed which were endorsed by the issues group are also enclosed.

As you can see the JAR/FAR 23 and ARAC Working Groups with the support of the Kansas City Technical staff and the relevant FAA Staff in Washington have carried out an extremely thorough review over a considerable period of time. As you are undoubtedly aware prior to the formation of the four ARAC Working Groups, GAMA, AECMA, JAA, and the FAA had been working The JAR/FAR 23 Harmonization Program for approximately 2 years.

I believe all the people involved should be highly commended for a difficult and painstaking job very well done.

In view of the importance of the overall harmonization program every effort should be made to publish the NPRMS prior to the Annual JAA/FAA meeting in June.

Sincerely,

Bernard Brown
Asst. Chair, GABA Issues Group

cc John Colomy - FAA, Kansas City
Jim Dougherty - GAMA
Claude Schmitt - AECMA
Alain Leroy - JAA

Recommendation

[4910-13]

DEPARTMENT OF TRANSPORTATION

Federal Aviation Administration

14 CFR Parts 23

[Docket No. ; Notice No.]

RIN: 2120-

Airworthiness Standards; Airframe Proposals Based on European Joint Aviation Requirements Proposals

AGENCY: Federal Aviation Administration, DOT.

ACTION: Notice of proposed rulemaking (NPRM).

SUMMARY: This notice proposes changes to the airframe airworthiness standards for normal, utility, acrobatic, and commuter category airplanes. These proposals arise from the joint effort of the Federal Aviation Administration (FAA) and the European Joint Aviation Authorities (JAA) to harmonize the Federal Aviation Regulations (FAR) and the Joint Aviation Requirements (JAR) for airplanes that will be certificated in these categories. The proposed changes would provide nearly uniform airframe airworthiness standards for airplanes certificated in the United States under 14 CFR part 23 (part 23) and in the JAA countries under Joint Aviation Requirements 23 (JAR 23) simplifying airworthiness approvals for import and export purposes.

DATES: Comments must be submitted on or before [Insert date 120 days after date of publication in the Federal Register].

ADDRESSES: Comments on this notice should be mailed in triplicate to: Federal Aviation Administration, Office of the Chief Counsel, Attention: Rules Docket (AGC-200), Docket No. ,

800 Independence Avenue, SW., Washington, DC 20591. Comments delivered must be marked Docket No. . Comments may be inspected in Room 915G weekdays between 8:30 a.m. and 5:00 p.m., except on Federal holidays.

In addition, the FAA is maintaining an information docket of comments in the Office of the Assistant Chief Counsel, ACE-7, Federal Aviation Administration, Central Region, 601 East 12th Street, Kansas City, Missouri 64106. Comments in the duplicate information docket may be inspected in the Office of the Assistant Chief Counsel weekdays, except Federal holidays, between the hours of 7:30 a.m. and 4:00 p.m.

FOR FURTHER INFORMATION CONTACT: Kenneth W. Payauys, ACE-112, Small Airplane Directorate, Aircraft Certification Service, Federal Aviation Administration, 601 East 12th Street, Kansas City, Missouri 64106; telephone (816) 426-5688.

SUPPLEMENTARY INFORMATION:

Comments Invited

Interested persons are invited to participate in the making of the proposed rule by submitting such written data, views, or arguments as they may desire. Comments relating to the environmental, energy, or economic impact that might result from adopting the proposals in this notice are also invited. Substantive comments should be accompanied by cost estimates. Comments should identify the regulatory docket or notice number and should be submitted in triplicate to the Rules Docket address

specified above. All comments received on or before the specified closing date for comments will be considered by the Administrator before taking action on this proposed rulemaking. The proposals contained in this notice may be changed in light of comments received. All comments received will be available, both before and after the closing date for comments, in the Rules Docket for examination by interested persons. A report summarizing each FAA public contact concerned with the substance of this proposal will be filed in the docket. Commenters wishing the FAA to acknowledge receipt of their comments submitted in response to this notice must include a preaddressed, stamped postcard on which the following statement is made: "Comments to Docket No. ." The postcard will be date stamped and returned to the commenter.

Availability of NPRM

Any person may obtain a copy of this Notice of Proposed Rulemaking (NPRM) by submitting a request to the Federal Aviation Administration, Office of Public Affairs, Attention: Public Inquiry Center, APA-200, 800 Independence Avenue, SW., Washington, DC 20591, or by calling (202) 267-3484. Communications must identify the notice number of this NPRM.

Persons interested in being placed on the mailing list for future NPRM's should request, from the above office, a copy of Advisory Circular No. 11-2A, Notice of Proposed Rulemaking Distribution System, which describes the application procedure.

Background

At the June 1990 meeting of the JAA Council (consisting of JAA members from European countries) and the FAA, the FAA Administrator committed the FAA to support the harmonization of the FAR with the JAR being developed for use by the European authorities who are members of the JAA. In response to this commitment, the FAA Small Airplane Directorate established an FAA Harmonization Task Force to work with the JAR 23 Study Group to harmonize part 23 and the proposed JAR 23. The General Aviation Manufacturers Association (GAMA) also established a JAR 23/part 23 Committee to provide technical assistance in this effort.

Following a review of the first draft of proposed JAR 23, members of the FAA Harmonization Task Force and the GAMA Committee, met in Brussels, Belgium for the October 1990 meeting of the JAR 23 Study Group. Representatives from the Association Europeenne des Constructeures de Material Aerospatial (AECMA), an organization of European airframe manufacturers, also attended. The main agenda item for this meeting was the establishment of procedures to accomplish harmonization of the airworthiness standards for normal, utility, and acrobatic category airplanes. The JAA had decided that its initial rulemaking effort should be limited to these three categories and that commuter category airworthiness standards should be addressed separately.

After that meeting, technical representatives from each of the four organizations (GAMA, AECMA, FAA and JAA) met to resolve differences between the proposed JAR and part 23. This portion of

the harmonization effort involved a number of separate meetings of specialists in the flight, airframe, powerplant, and systems disciplines. These meetings showed that harmonization would require revisions to both part 23 and the proposed JAR 23.

Near the end of the effort to harmonize the normal, utility, and acrobatic category airplane airworthiness standards, the JAA requested and received recommendations from its member countries on proposed airworthiness standards for commuter category airplanes. The JAA and the FAA held specialist and study group meetings to discuss these recommendations, which resulted in proposals to revise portions of the part 23 commuter category airworthiness standards.

Unlike European rulemaking, where commuter category airworthiness standards are separate, for U.S. rulemaking it is advantageous to adopt normal, utility, acrobatic, and commuter category airworthiness standards simultaneously, since commuter category airworthiness standards are already contained in part 23. Accordingly, this NPRM proposes to revise the airframe airworthiness standards for all part 23 airplanes.

During the part 23 harmonization effort, the FAA established an Aviation Rulemaking Advisory Committee (ARAC) (56 FR 2190, January 22, 1991), which held its first meeting on May 23, 1991 (56 FR 20492, May 3, 1991). The General Aviation and Business Airplane (GABA) Subcommittee was established at that meeting to provide advice and recommendations to the Director, Aircraft Certification

Service, FAA, regarding the airworthiness standards in part 23 as well as related provisions of parts 91 and 135 of the regulations.

The FAA announced, on June 2-5, 1992, at the JAA/FAA Harmonization Conference in Toronto, Ontario, Canada, that it would consolidate within the ARAC structure an ongoing objective to "harmonize" the JAR and the FAR. Coinciding with that announcement, the FAA assigned the GABA Subcommittee those rulemaking projects related to JAR/part 23 harmonization that were in final coordination between the JAA and the FAA. The harmonization process included the intention to present the results of JAA/FAA coordination to the public as NPRM's. Subsequently, the GABA Subcommittee established the JAR/part 23 Study Group.

The JAR 23 Study Group made recommendations to the GABA Subcommittee concerning the FAA disposition of the rulemaking issues coordinated between the JAA and the FAA. The draft NPRM's previously prepared by the FAA harmonization team were made available to the harmonization working group to assist them in their effort.

The FAA received unsolicited comments from the JAA dated January 20, 1994, concerning issues that were left unresolved with the JAR 23 Study Group. The JAR/FAR 23 Harmonization Working Group did not address some of the unresolved issues because the JAA had not yet reached positions on those issues. Unresolved issues will be dealt with at future FAR/JAR Harmonization meetings. With respect to other issues unresolved by the JAR 23 Study Group, the JAR/FAR 23 Harmonization Working Group recommendations did not

reflect harmonization, but reflected the technical discussion of the merits of each issue that had been thoroughly debated at the JAR/FAR Harmonization meetings. (The Working Group Chairperson had been present at the Harmonization meetings.) The JAA comments have been placed in the docket for this proposal, and will be considered along with those received during the comment period.

Following completion of these harmonization efforts, the FAA determined that the proposed revisions to part 23 were too numerous for a single NPRM. The FAA decided to simplify the issues by issuing four NPRM's. These NPRM's address the airworthiness standards in the specific areas of systems and equipment, powerplant, flight, and airframe. These NPRM's propose changes in all seven subparts of part 23. Since there is some overlap, interested persons are advised to review all four NPRMs to identify all proposed changes to a particular section.

A notice of the formation of the JAR/FAR 23 Harmonization Working Group was published on November 30, 1992 (57 FR 56626). The group held its first meeting on February 2, 1993. These efforts resulted in the proposals for airframe airworthiness standards contained in this notice. The GABA Subcommittee agreed with these proposals.

In addition to the initiatives described above, the FAA developed several rulemaking documents based on the 1983 Small Airplane Airworthiness Review Program. A number of the changes proposed in this document relate directly to final rule changes which were an outgrowth of the 1983 review. Amendment 23-43 (58 FR

18958, April 9, 1993) and Amendment 23-45 (58 FR 42136, August 6, 1993) are referenced by amendment number in this document where relevant to the changes being proposed.

Discussion of Proposals

Section 23.301 Loads.

This proposal would amend § 23.301(d) by limiting the applicability of Appendix A to "single-engine, excluding turbines" airplanes rather than the current single-engine limitation. The JAA proposed "single reciprocating engine" instead of "single-engine," which appears in the current regulations. The FAA proposes "single-engine, excluding turbines" for the reasons explained in the preamble to Appendix A. The effect would be to eliminate alternative Appendix A airplane design requirements for turbine engines because the JAA determined, and the FAA agrees, that only single-engine airplanes, excluding turbines, were envisioned when Appendix A was introduced. Turbine airplane designs may continue to be FAA certificated by substantiation to part 23, Subpart C, requirements plus any special conditions as prescribed under § 21.16. The proposed changes to this section clarify that Appendix A applies only to single-engine airplanes, except turbines.

In § 23.301(d), the phrase "For conventional, single-engine airplanes of 6,000 pounds or less" would be replaced by the phrase "For airplane configurations described in Appendix A23.1."

Section 23.335 Design airspeeds.

Portions of § 23.335 would be revised for clarification and harmonization with JAR 23. Paragraph (a)(1) would be revised by adding a definition for W/S as "wing loading at the design maximum takeoff weight." Paragraph (a)(1)(i) and (ii) would be revised to correct the equations for design cruise speed from "33 W/S" to "33 $\sqrt{(W/S)}$" and from "36 $\sqrt{W/S}$" to "36 $\sqrt{(W/S)}$."

Section 23.335(b)(4) would be revised by adding a new paragraph (b)(4)(iii) that includes a new mach number speed margin, 0.07M, for commuter category airplanes. Because commuter category airplanes are normally operated at higher altitudes than normal, utility, and acrobatic category airplanes, they experience greater atmospheric variations, such as horizontal gusts and the penetration of jet streams or cold fronts. Therefore, a higher minimum speed margin is required. The JAR proposed adding this mach number speed margin. The original mach number speed margin of 0.05M is retained for normal, utility, and acrobatic category airplanes.

An incorrect equation, $\sqrt{(n_g)}\ V_{S1}$, appears in § 23.335(d)(1). This equation for the design speed for maximum gust intensity, V_B, would be corrected to $V_{S1}\ \sqrt{n_g}$.

Section 23.337 Limit maneuvering load factors.

Section 23.337(a)(1) would be revised by clarifying the equation and by adding a definition for "W." This definition of "W," "design maximum takeoff weight," was requested by the JAA to harmonize with JAR 23.

Section 23.341 Gust load factors.

Section 23.341 would be reorganized to provide a new paragraph (a) that clarifies that each airplane must be designed to withstand loads on each lifting surface that result from gusts specified in § 23.333(c). Existing paragraphs (a) and (b) would be redesignated as (b) and (c), respectively. The text of the proposed paragraph (b) would be revised to eliminate the phrase, "considering the criteria of § 23.333(c), to develop the gust loading on each lifting surface" since this requirement would be located in proposed paragraph (a). The reference to paragraph (b) in redesignated § 23.341(b) is changed to paragraph (c) to conform. The text for the redesignated paragraph (c) would be revised to delete the phrase "for conventional configurations" because it is no longer accurate, and to revise the definition for wing loading (W/S). These changes are being made at the request of the JAA to harmonize with JAR 23.

Section 23.343 Design fuel loads.

Proposed new § 23.343 would harmonize with the corresponding JAR except for paragraph (c). This proposed requirement, which is a modified version of § 25.343 that covers transport category, would apply to all part 23 airplane categories except one paragraph would be limited to commuter category airplanes.

Airplanes already exist with "maximum zero fuel" weight limits that apply to zero fuel in the airplane (wing, fuselage, and so forth), rather than in the wing only. Therefore, "maximum wing

zero fuel" weight was suggested for use when it is appropriate for the type of fuel system in the design.

The FAA agreed, in a JAA/FAA Harmonization Study Group Meeting in Vienna, in July 1992, to propose the requirements in three paragraphs. The JAA would only propose paragraphs (a) and (b) for JAR 23 because they do not have a 45-minute fuel reserve operating rule. Also, the JAA decided to put paragraph (c) into a Notice of Proposed Action (NPA) to await the creation of the necessary operating rule. In February 1993, the same group agreed to have paragraph (b) address "maximum zero wing fuel" weight, instead of "maximum zero fuel" weight as mentioned above. The group agreed not to refer to the Operating Limitation Section of the Airplane Flight Manual (AFM) required by proposed § 23.1583(c)(6) (as presented in the Flight Harmonization NPRM) since that section already contains a reference to § 23.343.

Section 23.345 High lift devices.

Revised § 23.345(a) would have minor, non-substantive, clarifying changes. The term fully deflected is changed to fully extended because it more accurately describes flap conditions and positions. The phrase "resulting in limit load factors" is removed because the requirement already exists in § 23.301(a). Current paragraph (d) would be redesignated as paragraph (c) without change.

Current paragraph (c) would be redesignated as paragraph (d) and revised by including the requirements of § 23.457. Paragraph (e) would be deleted since it merely references the requirements of

§ 23.457, which have been moved to § 23.345(d). This arrangement places all "flap" requirements in one location, and would harmonize the requirements with JAR 23.

Section 23.347 Unsymmetrical flight conditions.

The proposed revision to § 23.347 would redesignate the existing text as paragraph (a) and add a new paragraph (b) that includes requirements for a flick maneuver (snap roll), if requested for aerobatic category airplanes. This change is being made to harmonize with the JAR.

Section 23.349 Rolling conditions.

Section 23.349(a)(2) would be revised to simplify the unsymmetric semispan load assumption to 100 percent and 75 percent for all design weights up through 19,000 pounds. The FAA had suggested varying the latter percentage linearly between 70 percent and 77.5 percent to include aircraft weighing up to 19,000 pounds. After discussion with the JAA, the FAA agrees that 75 percent is an appropriate assumption for all part 23 airplanes.

Section 23.369 Special conditions for rear lift truss.

This proposal would amend § 23.369 by amending the equation and by adding a definition for wing loading (W/S) for clarification and to harmonize with JAR 23.

Section 23.371 Gyroscopic and aerodynamic loads.

Section 23.371(a) would be revised and reorganized by designating the existing text as paragraph (a) and adding new paragraphs (b) and (c).

Revisions to the text of proposed paragraph (a) would delete the limitation for turbine powered engines; add inertial loads; and replace the word "engines" with "engine(s) and propeller(s), if applicable." These changes would clarify that these requirements apply to all part 23 airplanes.

Proposed new paragraph (b) would clarify and distinguish the requirements for airplanes approved for acrobatic maneuvers. These clarifications are needed to harmonize with the JAR.

Proposed new paragraph (c) would clarify that commuter category airplanes must comply with the gust conditions in § 23.341 in addition to the requirement of § 23.371(a). This clarification is necessary to harmonize with the JAR.

Section 23.391 Control surface loads.

This proposal would revise § 23.391 by deleting paragraph (b) and removing the designation for paragraph (a). Current paragraph (b) is a reference to alternative values of control loading in Appendix B. Appendix B was previously removed by amendment 23-42 (56 FR 344, January 3, 1991).

Section 23.393 Loads parallel to hinge line.

Proposed new § 23.393, as suggested by the JAA, would contain a modified version of the requirement of § 23.657(c) concerning loads parallel to the hinge line, which would be deleted from § 23.657. The requirement would specify minimum inertial load values, and be included in new § 23.393(b) to group the load factors in consecutive sections.

Section 23.399 Dual control system.

Existing § 23.399 does not address the forces exerted on a dual control system when both pilots act together. The JAA has proposed adding a new paragraph (b) to account for these pilot forces. The material in present § 23.399 would be reorganized as paragraph (a), revised to clarify that it is the greater of the forces that apply, and a new paragraph (b) would be added to include the JAA suggestion and harmonize the rules.

Section 23.415 Ground gust conditions.

This proposal would amend § 23.415 by revising paragraph (a)(2) to add a definition for wing loading (W/S) to harmonize with JAR 23 except that 88 (f.p.s.) is raised to 110 (f.p.s.) to be consistent with the 65-knot wind speed of proposed paragraph (c). It would also revise paragraph (c). Before paragraph (c) was added in amendment 23-45, the FAA agreed to a more comprehensive version of the tie-down criteria that was suggested by the JAA. This amendment would implement that agreement and harmonize the rules.

Section 23.441 Maneuvering loads.

The JAA suggested that § 23.441(b) be revised to include a new design requirement for the vertical tail of a commuter category airplane. The JAA determined that the vertical tail structure must be shown to be adequate for the loads imposed when the airplane is yawed by rudder deflection to the maximum attainable angle and is suddenly allowed to return by neutralizing the rudder. The maximum yaw condition is governed by any of several constraining conditions; for example, control surface stops, maximum available

booster effort, or the various maximum pilot rudder forces that may be imposed. The JAA stressed that the design yaw excursions need to be examined throughout the full range of speeds of the flight envelope. The FAA agrees. Although this is a significant departure from the structural design philosophy depicted in part 23, that is full use of all controls at maneuvering speed, the addition of a similar requirement to part 25 has served to reduce the static overload failures in part 25 airplanes. It is expected that the addition of the proposed requirement for § 23.441(b) would reduce this type failure in commuter category airplanes.

In addition, the permissible overswing angle that may be assumed under § 23.441(a)(2) would be changed from 1.3 to 1.5 times the static sideslip angle of paragraph (a)(3). The JAA informed the FAA that the 1.5 figure more closely represents reality. The FAA agrees and the rule is changed to harmonize with the JAR. Finally, for clarification, the word "resulting" is changed to "overswing" in the first sentence of paragraph (a)(2).

Section 23.443 Gust loads.

Section 23.443(c) would be revised by changing the format of the formula, revising the definition of weight, "W," and correcting the subscripts of the distance to the lift center, "l_{vt}." The current definition reads "W = airplane weight (lbs.)." The proposed definition reads "W = the applicable weight of the airplane in the particular load case (lbs.)." The proposed changes are for clarity and harmonization with JAR 23.

Sections 23.455 Ailerons.

The heading that precedes § 23.455 would be amended by deleting the term "Wing Flaps" so that the heading reads "AILERONS AND SPECIAL DEVICES." This change reflects the proposed deletion of the wing flap requirements from § 23.457 and their placement in § 23.345.

Section 23.457 Wing flaps.

The FAA proposes to delete this section. As discussed under § 23.345, above, the wing flap requirements have been revised and consolidated in proposed § 23.345 to group these requirements together.

Section 23.473 Ground load conditions and assumptions.

The reference in § 23.473(c)(1) would be revised. In amendment 23-42 (January 3, 1991, 56 FR 344), § 23.473(c)(1) incorrectly continued to reference "§ 23.67(a) or (b)(1)." The reference in § 23.473(c)(1) should have been changed to "§ 23.67(b)(1)."

The FAA also intends that turbine powered airplanes be included in § 23.473(c)(1) because these airplanes are required to be "climb positive" with one engine inoperative. Therefore, § 23.473(c)(1) must also reference "§ 23.67(c)."

Originally, the FAA intended to harmonize § 23.473(c)(1) by citing only § 23.67. However, after considering the two issues noted above, the FAA has determined that the intent described is lost unless § 23.473(c)(1) specifically includes "§ 23.67(b)(1) or (c)."

Paragraph (f), which addresses energy absorption tests, would be revised to parallel the language of JAR 23.473(f) with no substantive change from current paragraph (f).

Section 23.497 Supplementary conditions for tail wheels.

Proposed new § 23.497(c) would establish design standards for the aft-mounted propellers of § 23.925(b). The FAA has determined that certain portions of the design standards for aft-mounted propellers more properly belong in subpart C on structure. The remainder of the standards will remain in subpart E.

Section 23.499 Supplementary conditions for nose wheels.

Proposed new §§ 23.499(d) and (e) would establish nose wheel conditions for airplanes with a steerable nose wheel controlled by hydraulic or other power and for airplanes with a steerable wheel that has a direct mechanical connection to the rudder pedals. Initial versions of these two paragraphs were introduced at the Second Structures Specialist Meeting, revised, and ratified by the JAR 23 Study Group in April 1991. The new paragraphs codify current certification practice and distinguish the two types of control systems to harmonize with JAR 23.

Section 23.521 Water load conditions.

This proposal would amend § 23.521 by deleting paragraph (c), which was added by amendment 23-45. The JAA pointed out that paragraph (c) contains requirements already covered in paragraph (a). The FAA agrees, and proposes to delete paragraph (c).

Section 23.561 General.

This proposal would amend §§ 23.561(b), (d), and (e) by revising the existing requirements to harmonize with JAR 23. Revised paragraph (b), concerning occupant protection, proposes language similar to part 25/JAR 25. Paragraph (d), concerning turnovers, would be revised to simplify and clarify the requirements without making substantive changes. Proposed new paragraph (e), concerning supporting structure, would be revised to add references to § 23.561(b)(3) and § 23.787(c) to ensure that items of mass are retained to higher accelerations than the occupant for occupant protection.

Section 23.571 Metallic pressurized cabin structures.

Section 23.571 would be revised by changing the heading from "Pressurized cabin" to "Metallic pressurized cabin structure" because nonmetallic structure is addressed in § 23.573(a); by designating the introductory paragraph as paragraph (a) and limiting the applicability to normal, utility, and acrobatic category only because commuter category airplanes are addressed separately; by revising the text of current paragraph (a) and redesignating it as paragraph (a)(1); and by redesignating original paragraphs (b) and (c) as (a)(2) and (a)(3), respectively.

The revised text of current (a) would require the fatigue strength investigation to show that the structure can withstand repeated loads of variable magnitude expected in service. Currently, fatigue strength may be shown by tests or analysis or

both. Under the proposed revision, structural strength must be shown by tests or by analysis supported by test evidence.

Section 23.572 Metallic wing, empennage, and associated structures.

This proposal would revise the heading to add the word "metallic" and revise § 23.572(a) to limit the applicability to normal, utility, and acrobatic category airplanes and to make minor editorial changes. Paragraph (a)(1) is revised to harmonize with JAR 23 by requiring tests or analysis supported by test evidence, as discussed under § 23.571 of this preamble.

Section 23.573 Damage tolerance and fatigue evaluation of structure.

This proposal would amend § 23.573(a)(5) to clarify the regulation, as written, because it could be easily misread. The rewritten requirement uses the word "any" rather than "each" to indicate that another limiting factor exists. It also changes the order of the clauses to prevent the regulation from addressing "failure of the limit load capacity." The rewritten text makes it clear that "Each bonded joint is required to be substantiated by tests" is not the desired result.

The FAA is not proposing a revision to paragraph (b) even though it is not identical in format to JAR 23.573(b). While current FAR § 23.573(b) contains two subparagraphs and JAR 23.573(b) (JAR 23-Post Consultation) contains six subparagraphs, the two rules are technically identical.

This proposal would delete § 23.573(c). Inspections and other procedures would be moved to § 23.575 and be made applicable to four sections pertaining to fatigue evaluation, namely, §§ 23.571, 23.572, 23.573 and 23.574.

Technically, these actions harmonize with the efforts taken by the JAA in similar paragraphs of JAR 23. JAR 23 contains identical inspection requirements in JAR 23.571(b), JAR 23.572(c) and (JAR 23.573(c)). The FAA format is different from the JAR 23 presentation. JAR 23 uses three paragraphs; proposed FAR 23 uses one section to accomplish the identical end result.

Section 23.574 Metallic damage tolerance and fatigue evaluation of commuter category airplanes.

This proposal would add a new § 23.574 that would delineate the damage tolerance and fatigue evaluation requirements for commuter category airplanes. The United Kingdom Civil Aviation Authority proposed to revise JAR 23.571 and 23.572 to require commuter category airplanes to meet the fail-safe provisions of those sections, and, thus, remove the safe-life provisions. The FAA representative agreed with the intent of the proposal but could not agree with any specific recommendation because the FAA was in the process of determining requirements for commuter category airplanes in the aging aircraft program. The majority of the subgroup decided they would not recommend the United Kingdom Civil Aviation Authority proposal.

In the evaluation of aging aircraft, the FAA determined that new commuter category airplanes must meet damage tolerance

requirements. The FAA then evaluated the damage tolerance procedures added by amendment 23-45, and the FAA is now proposing to add new § 23.574 that would require commuter category airplanes to comply with the damage tolerance and fatigue evaluation of § 23.573. Accordingly, as discussed previously, §§ 23.571 and 23.572 would be revised to clarify that these sections would apply only to normal, utility, and acrobatic category airplanes. Newly type certificated commuter category airplanes would have to meet proposed § 23.574 instead of §§ 23.571 and 23.572.

JAR 23 Structures Specialists and the JAR 23 Study Group agreed with these requirements and considered the impact upon the JAR 23 effort; they decided to place JAR 23.574 on the NPA list. By these actions, the JAA and the FAA will propose the same damage tolerance provisions for newly certificated commuter category airplanes.

Section 23.575 Inspections and other procedures.

This proposal would add a new § 23.575 that would clarify the need for airplane manufacturers to provide recommendations for inspection frequencies, locations and methods when the design is approved by the FAA. The need for these inspections and procedures has been unclear for the past 20 years. This proposal clarifies the requirement and satisfies the need. Both safe-life and damage-tolerant airplanes designs are involved. Also, both composite and metallic airplanes are included.

Section 23.573(c) would be moved to § 23.575 and revised. The revision consists of naming which requirements are included,

namely §§ 23.571, 23.572, 23.573 and 23.574. These four sections address pressurized cabin, wing, empennage (tail), and associated structures for metallic airplanes. They also provide standards for damage tolerance and fatigue evaluations of both composite and metallic airplane structures. New § 23.575 clarifies that inspection frequencies, locations and methods recommended by the airplane manufacturer are necessary, ending 20 years of guessing and uncertainty among designers and manufacturers.

By this action, the FAA avoids repeated, identical, or near identical, requirements in the airworthiness standards. Furthermore, the FAA harmonizes these rules with JAR 23 technically, but in a simpler format.

Section 23.607 Fasteners.

This proposal would amend § 23.607 by changing the section heading, by redesignating the existing requirement as paragraph (c), and by adding new paragraphs (a) and (b) to require the following: if the loss of a non-self-locking fastener would preclude continued safe flight and landing, a locking device must be incorporated, and the fastener must not be adversely affected by environmental conditions such as temperature or vibration. These requirements would be added for harmonization.

Section 23.611 Accessibility provisions.

Structural specialists from both the JAA and FAA agreed that § 23.611, Accessibility, is unclear in its intent and examples would be an aid to understanding.

The proposed revision would clarify the requirement. In the

Instructions for Continued Airworthiness required under § 23.1529, recommended or required inspection items to which access must be provided are identified. Following are examples of such items: 1) Principle structural elements and control system components that require inspection; 2) replaceable parts; and 3) parts that require adjustment or lubrication. Section 23.611 requires that, for any part requiring servicing, there must be a means of access incorporated into the aircraft design to allow this servicing to be accomplished. Whether the access provided is appropriate will depend on the nature of the item, and the frequency and complexity of the required inspection or maintenance actions.

Section 23.629 Flutter.

Section 23.629 would be revised to require either flight flutter tests and rational analysis or flight flutter tests and compliance with the FAA's "Simplified Flutter Prevention Criteria." Section 23.629 currently requires flutter substantiation by only one of three methods: a rational analysis, flight flutter test, or compliance with the "Simplified Flutter Prevention Criteria." The JAA argues that unless the rational analysis or simplified analysis is verified by some flight flutter tests, the validity of such an analysis is unknown. The JAA also points out that the extent of flight flutter testing depends upon the analysis prepared and the experience with similar designs. The FAA structures specialist agreed with these arguments and with harmonizing this section, even though it would represent an increased requirement for substantiation. These changes would be enacted by proposed

revisions to § 23.629(a), (b), and (c), noting that the designations of paragraphs (b) and (c) would be switched. Paragraph (d)(3)(i) would be revised to change the phrase "T-tail or boom tail" to "T-tail or other unconventional tail configurations" to be more inclusive and to represent the standard used in current certification.

Also, amendment 23-45 added § 23.629(g) and (h), which contain the phrase "by analysis or test" and is consistent with the original part 23 requirement in § 23.629(a); that is, the applicant is able to choose the method of substantiation. JAR 23.629(g) and (h) propose that substantiation be done only "by analysis." The JAA argues that the analysis required by the rule must be based upon a previously verified flutter analysis model. The JAA notes that this requirement exists in § 23.629(a), which generally states that full scale flight flutter tests must be conducted when the adequacy of flutter analysis and wind tunnel tests have not been established by previous experience with airplanes having similar design features, and when modifications to the type design have a significant effect upon the critical flutter modes. The FAA proposes to harmonize with JAR 23 by amending § 23.629(g) and (h) to remove the "or test" phrase. For an airplane that has undergone modification that could affect its flutter characteristics, proposed paragraph (i) would allow freedom from flutter to be shown by tests (under paragraph (a)) or by analysis alone if that analysis is based on previously approved data.

Section 23.657 Hinges.

This proposal would amend § 23.657 by deleting paragraph (c), which covers loads parallel to the hinge line. As discussed above, this requirement was moved to keep the load factors in consecutive regulatory sections.

Section 23.673 Primary flight controls.

A proposed revision to § 23.673 would delete the requirements for two-control airplanes consistent with actions being taken in the Flight Harmonization NPRM, §§ 23.177 and 23.201. The two-control airplane regulations were introduced in 1945 but no two-control airplanes have been certificated for several decades and no need is foreseen for these regulations. If an applicant proposes a two-control airplane, the FAA would issue special conditions. Accordingly, § 23.673(b) and the paragraph (a) indicator, since it is no longer needed, are deleted.

Additional harmonization with JAR 23 is accomplished by this action.

Section 23.725 Limit drop tests.

This proposal would amend § 23.725 by adding brackets to clarify the effective weight equation in paragraph (b).

Section 23.755 Hulls.

This proposal would amend § 23.755 by deleting paragraph (b), which provides that keels of hull seaplanes or amphibians of less than 1,500 pounds need not be compartmented and which is redundant with paragraph (a). The proposal would also redesignate paragraph (c) as new paragraph (b) and edit it for clarification.

Section 23.865 Fire protection of flight controls, engine mounts,

and other flight structures.

This section on fireproof material and shielding would be revised by changing the words "engine compartment" to "designated fire zones" to be consistent with recent revisions to §§ 23.1203 and 23.1181. The revision would include the phrase "adjacent areas that would be subjected to the effects of fire in the designated fire zones." Adding this phrase clarifies FAA practice that areas in and around a designated fire zone must also be protected, and harmonizes the rule with JAR 23.

Section 23.925 Propeller clearance.

This proposal would amend § 23.925(b), Aft mounted propellers, by removing the requirements on tail wheels, bumpers, and energy absorption devices and moving them to § 23.497, Supplementary conditions for tail wheels, as discussed above. The inspection/replacement criteria for tail wheel, bumper, and energy absorption device would be deleted because the inspection/ replacement is required in § 23.1529 and does not need to be repeated here.

Appendix A.

Three areas of Appendix A are revised: (1) A23.1 General; (2) A23.11 Control surface loads, paragraph (c), Surface loading conditions; (3) Table 2 - Average limit control surface loading. A new figure is added to Appendix A: Figure A7, Chordwise load distribution for stabilizer and elevator, or fin and rudder. These revisions are based upon limitations proposed in JAR 23, Appendix A. They are introduced to specify the configurations for which the

wing and tail surface loads, required in A23.7, are valid.

The title of Appendix A is revised by removing the words "for conventional, single-engine airplanes of 6,000 pounds or less maximum weight" because the weight limitation appears in paragraph A23.1(a).

In A23.1, existing paragraph (a) is extensively revised, existing paragraph (b) is deleted and replaced by new paragraph (b). The word "conventional" is removed and replaced by ten subparagraphs that more accurately describe what is meant by that long used term. The term "single engine" is changed to "single engine, excluding turbines" to clarify the applicability of the Appendix. This change permits the use of a rotary engine. Note that this was accomplished in JAR-VLA and AC 23-11 by using the term "single engine (spark- or compression-ignition)." The format differs from that originally proposed, and agreed to, by JAA/FAA structures specialists. However, the technical content remains the same. The JAA believes that these criteria represent those envisioned when Appendix A was first introduced.

Clarification changes are made to A23.11, paragraph (c)(1). Then, six paragraphs and a diagram, with defined terms, are added to specify and clarify the conditions that apply. Paragraph (d) is revised to correct a section reference.

The Chordwise Distribution for the Horizontal Tail I portion of Table 2 is deleted and replaced by a "See Figure A7" reference so that a more appropriate design load may be applied. Then, the Verticle Tail II portion of Table 2 is corrected by removing the

(a) and (b) references, and duplicate statements, so that "Right and Left," "Figure A5 Curve (1)," and "Same as above" remain in the columns.

A new Figure A7 is added to define both the chordwise load distribution and the corresponding parameters.

REGULATORY EVALUATION SUMMARY

Preliminary Regulatory Evaluation, Initial Regulatory Flexibility Determination, and Trade Impact Assessment

Proposed changes to Federal regulations must undergo several economic analyses. First, Executive Order 12866 directs that each Federal Agency shall propose or adopt a regulation only upon a reasoned determination that the benefits of the intended regulation justify its costs. Second, the Regulatory Flexibility Act of 1980 requires agencies to analyze the economic effects of regulatory changes on small entities. Third, the Office of Management and Budget directs agencies to assess the effects of regulatory changes on international trade. In conducting these analyses, the FAA has determined that this rule: (1) would generate benefits that justify its costs and is not a "significant regulatory action" as defined in the Executive Order; (2) is not significant as defined in DOT's Policies and Procedures; (3) would not have a significant impact on a substantial number of small entities; and (4) would not constitute a barrier to international trade. These analyses, available in the docket, are summarized below.

Regulatory Evaluation Summary

Of the part 23 sections that would be amended or added, the FAA has identified only 6 that would result in additional compliance costs, totalling between $12,000 and $20,000 per certification. When amortized over a production run, these costs would have a negligible impact on the cost per airplane. The FAA solicits comments concerning the incremental certification/ development costs attributable to the proposed rule.

The primary benefit of the proposed rule would be the cost efficiencies of harmonization with the JAR for those manufacturers who choose to market airplanes in JAA countries as well as to manufacturers in JAA countries who choose to market airplanes in the United States. Other benefits of the proposed rule would be decreased reliance on special conditions, simplification of the certification process through clarification of existing requirements, and increased flexibility through optional designs.

Regulatory Flexibility Determination

The Regulatory Flexibility Act of 1980 (RFA) was enacted by Congress to ensure that small entities are not unnecessarily and disproportionately burdened by Federal regulations. The RFA requires a Regulatory Flexibility Analysis if a proposed rule would have a significant economic impact, either detrimental or beneficial, on a substantial number of small entities. Based on FAA Order 2100.14A, Regulatory Flexibility Criteria and Guidance, the FAA has determined that the proposed amendments would not have

a significant economic impact on a substantial number of small entities.

International Trade Impact Assessment

The proposed rule would not constitute a barrier to international trade, including the export of American goods and services to foreign countries and the import of foreign goods and services into the United States. Instead, the proposed airframe certification procedures have been harmonized with those of the JAA and would lessen restraints on trade.

Federalism Implications

The regulations proposed herein would not have substantial direct effects on the States, on the relationship between the national government and the States, or on the distribution of power and responsibilities among the various levels of government. Therefore, according to Executive Order 12612, it is determined that this proposal would not have sufficient federalism implications to warrant the preparation of a Federalism Assessment.

Conclusion

The FAA proposes to revise the airframe airworthiness standards for normal, utility, acrobatic, and commuter category airplanes that are the same as the standards that will be proposed for the same category airplanes by the Joint Airworthiness Authorities in Europe. If adopted, the proposed revision would reduce the regulatory burden on the United States and European airframe manufacturers by relieving them of the need to show

compliance with different standards each time they seek certification approval of an airplane in a different country.

For the reasons discussed in the preamble, and based on the findings in the Regulatory Evaluation, the FAA has determined that this proposed regulation is not significant under Executive Order 12866. In addition, the FAA certifies that this proposal, if adopted, would not have a significant economic impact on a substantial number of small entities under the criteria of the Regulatory Flexibility Act. This proposal is not considered significant under DOT Regulatory Policies and Procedures (44 FR 11034, February 26, 1979). An initial regulatory evaluation of the proposal has been placed in the docket. A copy may be obtained by contacting the person identified under "FOR FURTHER INFORMATION CONTACT."

List of Subjects in 14 CFR Part 23

Aircraft, Aviation safety, Signs and symbols.

The Proposed Amendment

In consideration of the foregoing, the Federal Aviation Administration proposes to amend part 23 of the Federal Aviation Regulations (14 CFR part 23) as follows:

PART 23--AIRWORTHINESS STANDARDS: NORMAL, UTILITY, ACROBATIC, AND COMMUTER CATEGORY AIRPLANES.

1. The authority citation for part 23 continues to read as follows:

Authority: 49 U.S.C. app. 1344, 1354(a), 1355, 1421, 1423, 1425, 1428, 1429, 1430; 49 U.S.C. 106(g).

2. Section 23.301 is amended by revising paragraph (d) to read as follows:

§ 23.301 Loads.

* * * * *

(d) Simplified structural design criteria may be used if they result in design loads not less than those prescribed in §§ 23.331 through 23.521. For airplane configurations described in Appendix A23.1, the design criteria of appendix A of this part are an approved equivalent of §§ 23.321 through 23.459. If appendix A is used, the entire appendix must be substituted for the corresponding sections of this part.

3. Section 23.335 is amended by adding a definition for W/S and revising the equation for V_C in paragraph (a)(1)(i); by removing the period and adding "; and either" to the end of paragraph (b)(4)(i); by revising paragraph (b)(4)(ii); by adding a new paragraph (b)(4)(iii); and by revising the introductory text of paragraph (d)(1) to read as follows:

§ 23.335 Design airspeeds.

* * * * *

(a) * * *

(1) Where W/S = wing loading at the design maximum takeoff weight, V_c (in knots) may not be less than--

(i) 33 $\sqrt{(W/S)}$ (for normal, utility, and commuter category airplanes);

(ii) 36 $\sqrt{(W/S)}$ (for acrobatic category airplanes).

* * * * *

(b) * * *

(4) * * *

(ii) Mach 0.05 for normal, utility, and acrobatic category airplanes (at altitudes where M_D is established); or

(iii) Mach 0.07 for commuter category airplanes (at altitudes where M_D is established) unless a rational analysis, including the effects of automatic systems, is used to determine a lower margin. If a rational analysis is used, the minimum speed margin must be enough to provide for atmospheric variations (such as horizontal gusts, and the penetration of jet streams or cold fronts), instrument errors, airframe production variations, and must not be less than Mach 0.05.

* * * * *

(d) * * *

(1) V_B may not be less than the speed determined by the intersection of the line representing the maximum positive lift, $C_{N\,MAX}$, and the line representing the rough air gust velocity on the gust V-n diagram, or $V_{S1}\sqrt{n_g}$, whichever is less, where:

* * * * *

4. Section 23.337 is amended by revising paragraph (a)(1) to read as follows:

§ 23.337 Limit maneuvering load factors.

(a) * * *

(1) $2.1 + \frac{24,000}{W + 10,000}$ for normal and commuter category airplanes, where W = design maximum takeoff weight, except that n need not be more than 3.8;

* * * * *

5. Section 23.341 is amended by adding a new paragraph (a); by redesignating existing paragraphs (a) and (b) as paragraphs (b) and (c), respectively; by revising the redesignated paragraph (b); and by revising the introductory text, and the definition of "W/S" in the redesignated paragraph (c) to read as follows:

§ 23.341 Gust load factors.

(a) Each airplane must be designed to withstand loads on each lifting surface resulting from gusts specified in § 23.333(c).

(b) The gust load for a canard or tandem wing configuration must be computed using a rational analysis, or may be computed in accordance with paragraph (c) of this section, provided that the resulting net loads are shown to be conservative with respect to the gust criteria of § 23.333(c).

(c) In the absence of a more rational analysis, the gust load factors must be computed as follows--

$$n = 1 + \frac{K_g \, U_{de} \, V \, a}{498 \, (W/S)}$$

where-- * * *

W/S = Wing loading (p.s.f.) due to the applicable weight of the airplane in the particular load case.

* * * * *

6. A new § 23.343 is added to read as follows:

§ 23.343 Design fuel loads.

(a) The disposable load combinations must include each fuel load in the range from zero fuel to the selected maximum fuel load.

(b) If fuel is carried in the wings, the maximum allowable weight of the airplane without any fuel in the wing tank(s) must be established as "maximum zero wing fuel weight," if it is less than the maximum weight.

(c) For commuter category airplanes, a structural reserve fuel condition, not exceeding fuel necessary for 45 minutes of operation at maximum continuous power, may be selected. If a structural reserve fuel condition is selected, it must be used as the minimum fuel weight condition for showing compliance with the flight load requirements prescribed in this part and--

(1) The structure must be designed to withstand a condition of zero fuel in the wing at limit loads corresponding to:

(i) Ninety percent of the maneuvering load factors defined in § 23.337, and

(ii) Gust velocities equal to 85 percent of the values prescribed in § 23.333(c).

(2) The fatigue evaluation of the structure must account for any increase in operating stresses resulting from the design condition of paragraph (c)(1) of this section.

(3) The flutter, deformation, and vibration requirements must also be met with zero fuel in the wings.

7. Section 23.345 is revised to read as follows:

§ 23.345 High lift devices.

(a) If flaps or similar high lift devices are to be used for takeoff, approach or landing, the airplane, with the flaps fully extended at V_F, is assumed to be subjected to symmetrical maneuvers and gusts within the range determined by--

(1) Maneuvering, to a positive limit load factor of 2.0; and

(2) Positive and negative gust of 25 feet per second acting normal to the flight path in level flight.

(b) V_F must be assumed to be not less than 1.4 V_S or 1.8 V_{SF}, whichever is greater, where--

(1) V_S is the computed stalling speed with flaps retracted at the design weight; and

(2) V_{SF} is the computed stalling speed with flaps fully extended at the design weight.

However, if an automatic flap load limiting device is used, the airplane may be designed for the critical combinations of airspeed and flap position allowed by that device.

(c) In determining external loads on the airplane as a whole, thrust, slipstream, and pitching acceleration may be assumed to be zero.

(d) The flaps, their operating mechanism, and their supporting structures, must be designed to withstand the conditions prescribed in paragraph (a) of this section. In addition, with the flaps fully extended at V_F, the following conditions, taken separately, must be accounted for:

(1) A head-on gust having a velocity of 25 feet per second (EAS), combined with propeller slipstream corresponding to 75 percent of maximum continuous power; and

(2) The effects of propeller slipstream corresponding to maximum takeoff power.

8. Section 23.347 is amended by designating the existing text as paragraph (a) and by adding a new paragraph (b) to read as follows:

§ 23.347 Unsymmetrical flight conditions.

* * * * *

(b) Acrobatic category airplanes certified for flick maneuvers (snap-roll) must be designed for additional asymmetric loads acting on the wing and the horizontal tail.

9. Section 23.349(a)(2) is revised to read as follows:

§ 23.349 Rolling conditions.

* * * * *

(a) * * *

(2) For normal, utility, and commuter categories, in Condition A, assume that 100 percent of the semispan wing airload acts on one side of the airplane and 75 percent of this load acts on the other side.

* * * * *

10. Section 23.369(a) is revised to read as follows:

§ 23.369 Rear lift truss.

(a) If a rear lift truss is used, it must be designed to withstand conditions of reversed airflow at a design speed of--

$V = 8.7 \sqrt{(W/S)} + 8.7$ (knots), where W/S = wing loading at design maximum takeoff weight.

* * * * *

11. Section 23.371 is revised to read as follows:

§ 23.371 Gyroscopic and aerodynamic loads.

(a) Each engine mount and its supporting structure must be designed for the gyroscopic, inertial, and aerodynamic loads that result, with the engine(s) and propeller(s), if applicable, at maximum continuous r.p.m., under either:

(1) The conditions prescribed in § 23.351 and § 23.423; or

(2) All possible combinations of the following--

(i) A yaw velocity of 2.5 radians per second;

(ii) A pitch velocity of 1.0 radian per second;

(iii) A normal load factor of 2.5; and

(iv) Maximum continuous thrust.

(b) For airplanes approved for acrobatic maneuvers, each engine mount and its supporting structures must be designed to withstand the combined maximum yaw velocity, pitch velocity, and corresponding load factors expected during such maneuvers.

(c) For commuter category airplanes, the gust conditions specified in § 23.341 must be added to the conditions required by paragraph (a) of this section.

§ 23.391 [Amended]

12. Section 23.391 is amended by removing paragraph (b) and removing the designation "(a)" from the remaining paragraph.

13. A new § 23.393 is added to read as follows:

§ 23.393 Loads parallel to hinge line.

(a) Control surfaces and supporting hinge brackets must be designed to withstand inertial loads acting parallel to the hinge line.

(b) In the absence of more rational data, the inertial loads may be assumed to be equal to KW, where--

(1) K = 24 for vertical surfaces;

(2) K = 12 for horizontal surfaces; and

(3) W = weight of the movable surfaces.

14. Section 23.399 is revised to read as follows:

§ 23.399 Dual control system.

(a) Each dual control system must be designed to withstand the force of the pilots operating in opposition, using individual pilot forces not less than the greater of--

(1) 0.75 times those obtained under § 23.395; or

(2) The minimum forces specified in § 23.397(b).

(b) Each dual control system must be designed to withstand the force of the pilots applied together in the same direction, using individual pilot forces not less than 0.75 times those obtained under § 23.395.

15. Section 23.415 is amended by revising paragraphs (a)(2) and (c) to read as follows:

§23.415 Ground gust conditions.

(a) * * *

(2) If pilot forces less than the minimums specified in § 23.397(b) are used for design, the effects of surface loads due to ground gusts and taxiing downwind must be investigated for the entire control system according to the formula:

$$H = K\ c\ S\ q$$

where--

H = limit hinge moment (ft.-lbs.);

c = mean chord of the control surface aft of the hinge line (ft.);

S = area of control surface aft of the hinge line (sq. ft.);

q = dynamic pressure (p.s.f.) based on a design speed not less than $14.6\ \sqrt{(W/S)} + 14.6$ (f.p.s.) where W/S = wing loading at design

maximum weight, except that the design speed need not exceed 110 (f.p.s.);

K = limit hinge moment factor for ground gusts derived in paragraph (b) of this section. (For ailerons and elevators, a positive value of K indicates a moment tending to depress the surface and a negative value of K indicates a moment tending to raise the surface).

* * * * *

(c) At all weights between the empty weight and the maximum weight declared for tie-down stated in the appropriate manual, any declared tie-down points and surrounding structure, control system, surfaces and associated gust locks must be designed to withstand the limit load conditions that exist when the airplane is tied down and that result from wind speeds of up to 65 knots horizontally from any direction.

16. Section 23.441 is amended by revising paragraph (a)(2) and adding a new paragraph (b) to read as follows.

§ 23.441 Maneuvering loads.

(a) * * *

(2) With the rudder deflected as specified in paragraph (a)(1) of this section, it is assumed that the airplane yaws to the overswing sideslip angle. In lieu of a rational analysis, an overswing angle equal to 1.5 times the static sideslip angle of paragraph (a)(3) of this section may be assumed.

* * * * *

(b) For commuter category airplanes, the loads imposed by the following additional maneuver must be substantiated at speeds from V_A to V_D/M_D. When computing the tail loads--

(1) The airplane must be yawed to the largest attainable steady state sideslip angle, with the rudder at maximum deflection caused by any one of the following:

(i) Control surface stops;

(ii) Maximum available booster effort;

(iii) Maximum pilot rudder force as shown below:

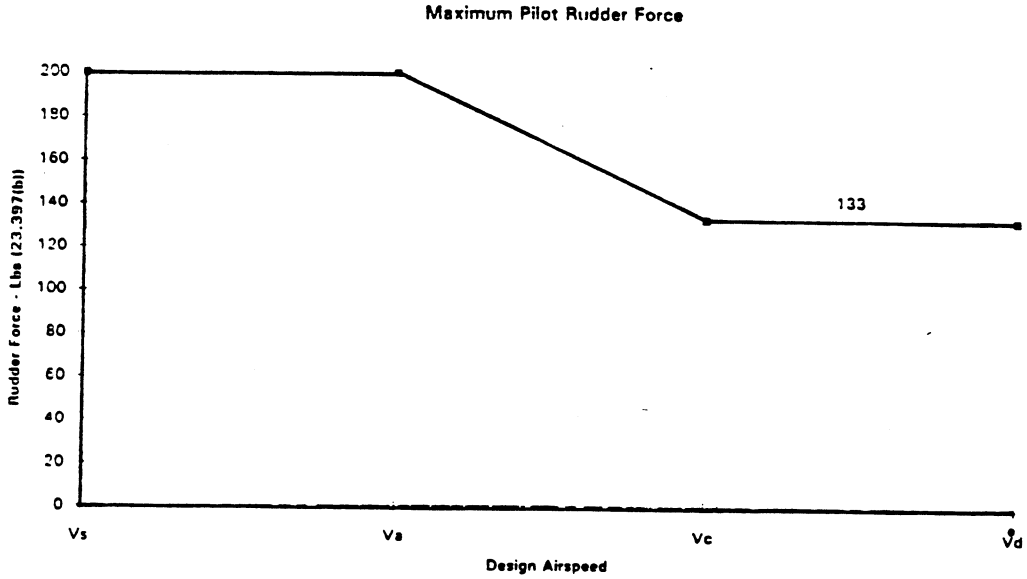

(2) The rudder must be suddenly displaced from the maximum deflection to the neutral position.

* * * * *

17. Section 23.443 is amended by revising paragraph (c) to read as follows:

§ 23.443 Gust loads.

* * * * *

(c) In the absence of a more rational analysis, the gust load must be computed as follows:

$$L_{vt} = \frac{K_{gt}\ U_{de}\ V\ a_{vt}\ S_{vt}}{498}$$

where--

L_{vt} = Vertical surface loads (lbs.);

$$k_{gt} = \frac{0.88\ \mu_{gt}}{5.3 + \mu_{gt}} = \text{gust alleviation factor;}$$

$$\mu_{gt} = \frac{2W}{\rho\ \bar{c}_t\ g\ a_{vt}\ S_{vt}} \left[\frac{K}{l_{vt}}\right]^2 = \text{lateral mass ratio;}$$

U_{de} = Derived gust velocity (f.p.s.);

ρ = Air density (slugs/cu.ft.);

W = the applicable weight of the airplane in the particular load case (lbs.);

S_{vt} = Area of vertical surface (ft.^{2});

$\bar{c}_t$ = Mean geometric chord of vertical surface (ft.);

a_{vt} = Lift curve slope of vertical surface (per radian);

K = Radius of gyration in yaw (ft.);

l_{vt} = Distance from airplane c.g. to lift center of vertical surface (ft.);

g = Acceleration due to gravity (ft./sec.^{2}); and

V = Equivalent airspeed (knots).

18. The heading "AILERONS, WING FLAPS, AND SPECIAL DEVICES" that appears between §§ 23.445 and 23.455 is amended to read "AILERONS AND SPECIAL DEVICES".

§ 23.457 Wing Flaps [Removed and reserved]

19. Section 23.457 is removed and reserved.

20. Section 23.473 is amended by revising paragraph (c)(1) and (f) to read as follows:

§ 23.473 Ground load conditions and assumptions.

* * * * *

(c) * * *

(1) The airplane meets the one-engine-inoperative climb requirements of § 23.67(b)(1) or (c); and

* * * * *

(f) If energy absorption tests are made to determine the limit load factor corresponding to the required limit descent velocities, these tests must be made under § 23.723(a).

21. Section 23.497 is amended by adding a new paragraph (c) to read as follows:

§ 23.497 Supplementary conditions for tail wheels.

* * * * *

(c) If a tail wheel, bumper, or an energy absorption device is provided to show compliance with § 23.925(b), the following apply:

(1) Suitable design loads must be established for the tail wheel, bumper, or energy absorption device; and

(2) The supporting structure of the tail wheel, bumper, or energy absorption device must be designed to withstand the loads established in paragraph (c)(1) of this section.

22. Section 23.499 is amended by adding new paragraphs (d) and (e) to read as follows:

§ 23.499 Supplementary conditions for nose wheels.

* * * * *

(d) For airplanes with a steerable nose wheel that is controlled by hydraulic or other power, at design takeoff weight with the nose wheel in any steerable position, the application of 1.33 times the full steering torque combined with a vertical reaction equal to 1.33 times the maximum static reaction on the nose gear must be assumed. However, if a torque limiting device is installed, the steering torque can be reduced to the maximum value allowed by that device.

(e) For airplanes with a steerable nose wheel that has a mechanical connection to the rudder pedals, the steering torque must be designed to withstand the maximum pilot forces specified in § 23.397(b).

§ 23.521 [Amended]

23. Section 23.521 is amended by removing paragraph (c).

24. Section 23.561 is amended by revising the introductory text of paragraph (b); by revising paragraphs (d)(1)(i) through (d)(1)(iv); by deleting paragraph (d)(1)(v); and by adding a new paragraph (e) to read as follows:

§ 23.561 General.

* * * * *

(b) The structure must be designed to give each occupant every reasonable chance of escaping serious injury when--

* * * * *

(d) * * *

(1) * * *

(i) The most adverse combination of weight and center of gravity position;

(ii) Longitudinal load factor of 9.0g;

(iii) Vertical load factor of 1.0g; and

(iv) For airplanes with tricycle landing gear, the nose wheel strut failed with the nose contacting the ground.

* * * * *

(e) Except as provided in § 23.787(c), the supporting structure must be designed to restrain, under loads up to those specified in paragraph (b)(3) of this section, each item of mass that could injure an occupant if it came loose in a minor crash landing.

25. Section 23.571 is amended by revising the heading; by revising and redesignating the introductory text as paragraph (a);

by revising and redesignating paragraph (a) as paragraph (a)(1); and by redesignating paragraphs (b) and (c) as paragraphs (a)(2) and (a)(3), respectively, to read as follows:

§ 23.571 Metallic pressurized cabin structures.

(a) For normal, utility, and acrobatic category airplanes, the strength, detail design, and fabrication of the metallic structure of the pressure cabin must be evaluated under one of the following:

(1) A fatigue strength investigation in which the structure is shown by tests, or by analysis supported by test evidence, to be able to withstand the repeated loads of variable magnitude expected in service; or

* * * * *

26. Section 23.572 is amended by revising the heading and by revising paragraphs (a) and (a)(1) to read as follows:

§ 23.572 Metallic wing, empennage, and associated structures.

(a) For normal, utility, and acrobatic category airplanes, the strength, detail design, and fabrication of those parts of the airframe structure whose failure would be catastrophic must be evaluated under one of the following unless it is shown that the structure, operating stress level, materials and expected uses are comparable, from a fatigue standpoint, to a similar design that has had extensive satisfactory service experience:

(1) A fatigue strength investigation in which the structure is shown by tests, or by analysis supported by test evidence, to be

able to withstand the repeated loads of variable magnitude expected in service; or

* * * * *

27. Section 23.573 is amended by changing the reference in paragraph (b) from § 23.571(c) to § 23.571(a)(3); by removing paragraph (c); and by revising the introductory text of paragraph (a)(5) to read as follows:

§ 23.573 Damage tolerance and fatigue evaluation of structure.

(a) * * *

(5) For any bonded joint, the failure of which would result in catastrophic loss of the airplane, the limit load capacity must be substantiated by one of the following methods--

* * * * *

28. A new § 23.574 is added to read as follows:

§ 23.574 Metallic damage tolerance and fatigue evaluation of commuter category airplanes.

For commuter category airplanes--

(a) Metallic damage tolerance. An evaluation of the strength, detail design, and fabrication must show that catastrophic failure due to fatigue, corrosion, defects, or damage will be avoided throughout the operational life of the airplane. This evaluation must be conducted in accordance with the provisions of § 23.573, except as specified in paragraph (b) of this section, for each part of the structure that could contribute to a

catastrophic failure.

(b) Fatigue (safe-life) evaluation. Compliance with the damage tolerance requirements of paragraph (a) of this section is not required if the applicant establishes that the application of those requirements is impractical for a particular structure. This structure must be shown, by analysis supported by test evidence, to be able to withstand the repeated loads of variable magnitude expected during its service life without detectable cracks. Appropriate safe-life scatter factors must be applied.

29. A new § 23.575 is added to read as follows:

§ 23.575 Inspections and other procedures.

Each inspection or other procedure, based on an evaluation required by §§ 23.571, 23.572, 23.573 or 23.574, must be established as necessary to prevent catastrophic failure and must be included in the Limitations Section of the Instructions for Continued Airworthiness required by § 23.1529.

30. Section 23.607 is revised to read as follows:

§ 23.607 Fasteners.

(a) Each non-self-locking bolt, screw, nut, pin, or other fastener must, if its loss would preclude continued safe flight and landing, incorporate a locking device.

(b) Fasteners and their locking devices must not be adversely affected by the environmental conditions associated with the particular installation.

(b) Fasteners and their locking devices must not be adversely affected by the environmental conditions associated with the particular installation.

(c) No self-locking nut may be used on any bolt subject to rotation in operation unless a non-friction locking device is used in addition to the self-locking device.

31. Section 23.611 is revised to read as follows:

§ 23.611 Accessibility provisions.

For each part that requires maintenance, inspection, or other servicing, appropriate means must be incorporated into the aircraft design to allow such servicing to be accomplished.

32. Section 23.629 is amended by revising the introductory text of paragraph (a); by revising and redesignating existing paragraph (b) as paragraph (c); by redesignating existing paragraph (c) as paragraph (b) and revising its introductory text; by revising paragraph (d)(3)(i); by revising paragraphs (g) and (h); and by adding a new paragraph (i) to read as follows:

§ 23.629 Flutter.

(a) It must be shown by the methods of paragraph (b), and either paragraph (c) or (d) of this section, that the airplane is free from flutter, control reversal, and divergence for any condition of operation within the limit V-n envelope and at all speeds up to the speed specified for the selected method. In addition--

* * * * *

(b) Flight flutter tests must be made to show that the airplane is free from flutter, control reversal and divergence and to show that--

* * * * *

(c) Any rational analysis used to predict freedom from flutter, control reversal and divergence must cover all speeds up to 1.2 V_D.

(d) * * *

(3) * * *

(i) Does not have a T-tail or other unconventional tail configurations;

* * * * *

(g) For airplanes showing compliance with the fail-safe criteria of §§ 23.571 and 23.572, the airplane must be shown by analysis to be free from flutter up to V_D/M_D after fatigue failure, or obvious partial failure of a principal structural element.

(h) For airplanes showing compliance with the damage tolerance criteria of § 23.573, the airplane must be shown by analysis to be free from flutter up to V_D/M_D with the extent of damage for which residual strength is demonstrated.

(i) For modifications to the type design that could affect the flutter characteristics, compliance with paragraph (a) of this section must be shown, except that analysis based on previously approved data may be used alone to show freedom from flutter,

control reversal and divergence, for all speeds up to the speed specified for the selected method.

§ 23.657 [Amended]

33. Section 23.657 is amended by deleting paragraph (c).

§ 23.673 [Amended]

34. Section 23.673 is amended by deleting paragraph (b) and the paragraph designation "(a)" for the remaining paragraph.

35. Section 23.725 is amended by revising the equation in paragraph (b) to read as follows:

§ 23.725 Limit drop tests.

* * * * *

(b) * * *

$$W_e = W \frac{[h + (1 - L)\ d]}{(h + d)}$$

* * * * *

36. Section 23.755 is amended by removing existing paragraph (b), and by revising and redesignating paragraph (c) as paragraph (b) to read as follows:

§ 23.755 Hulls.

* * * * *

(b) Watertight doors in bulkheads may be used for communication between compartments.

37. Section 23.865 is revised to read as follows:

§ 23.865 Fire protection of flight controls, engine mounts, and other flight structure.

Flight controls, engine mounts, and other flight structure located in designated fire zones, or in adjacent areas that would be subjected to the effects of fire in the designated fire zones, must be constructed of fireproof material or be shielded so that they are capable of withstanding the effects of a fire. Engine vibration isolators must incorporate suitable features to ensure that the engine is retained if the non-fireproof portions of the isolators deteriorate from the effects of a fire.

38. Section 23.925 is amended by revising paragraph (b) to read as follows:

§ 23.925 Propeller clearance.

* * * * *

(b) Aft-mounted propellers. In addition to the clearances specified in paragraph (a) of this section, an airplane with an aft mounted propeller must be designed such that the propeller will not contact the runway surface when the airplane is in the maximum pitch attitude attainable during normal takeoffs and landings.

* * * * *

39. Appendix A is amended by revising section A23.1; by revising paragraphs A23.11(c)(1) and (d); by revising Table 2; and

by adding Figure A7 to read as follows:

APPENDIX A TO PART 23-SIMPLIFIED DESIGN LOAD CRITERIA.

A23.1 General.

(a) The design load criteria in this appendix are an approved equivalent of those in §§ 23.321 through 23.459 of this subchapter for an airplane with a maximum weight of 6,000 pounds or less and the following configuration:

(1) A single engine, excluding turbines;

(2) A main wing located closer to the airplane's center of gravity than to the aft, fuselage-mounted, empennage;

(3) A main wing that contains a quarter-chord sweep angle of not more than 15 degrees fore or aft;

(4) A main wing that is equipped with trailing-edge controls, (ailerons or flaps, or both);

(5) A main wing aspect ratio not greater than 7;

(6) A horizontal tail aspect ratio not greater than 4;

(7) A horizontal tail volume coefficient not less than 0.34;

(8) A vertical tail aspect ratio not greater than 2;

(9) A vertical tail planform area not greater than 10 percent of the wing planform area; and

(10) Symmetrical airfoils must be used in both the horizontal and vertical tail designs.

(b) Appendix A criteria may not be used on any airplane configuration that contains any of the following design features:

(1) Canard, tandem-wing, close-coupled, or tailless arrangements of the lifting surfaces;

(2) Biplane or multiplane wing arrangements;

(3) T-tail, V-tail, or cruciform-tail (+) arrangements;

(4) Highly-swept wing planforms (more than 15-degrees of sweep at the quarter-chord), delta planforms, or slatted lifting surfaces; or

(5) Winglets or other wing tip devices, or outboard fins.

* * * * *

A23.11 Control surface loads.

* * * * *

(c) * * *

(1) Simplified limit surface loadings for the horizontal tail, vertical tail, aileron, wing flaps, and trim tabs are specified in figures 5 and 6 of this appendix.

(i) The distribution of load along the span of the surface, irrespective of the chordwise load distribution, must be assumed proportional to the total chord, except on horn balanced surfaces.

(ii) The load on the stabilizer and elevator, and the load on fin and rudder, must be distributed chordwise as shown in Figure 7 of this appendix.

(iii) In order to ensure adequate torsional strength and to account for maneuvers and gusts, the most severe loads must be considered in association with every center of pressure position between the leading edge and the half chord of the mean chord of the surface (stabilizer and elevator, or fin and rudder).

(iv) To ensure adequate strength under high leading edge loads, the most severe stabilizer and fin loads must be further

considered as being increased by 50 percent over the leading 10 percent of the chord with the loads aft of this appropriately decreased to retain the same total load.

(v) The most severe elevator and rudder loads should be further considered as being distributed parabolically from three times the mean loading of the surface (stabilizer and elevator, or fin and rudder) at the leading edge of the elevator and rudder, respectively, to zero at the trailing edge according to the equation:

$$P(x) = 3\,(\bar{w})\,\frac{c - x}{c_f}^{\,2}$$

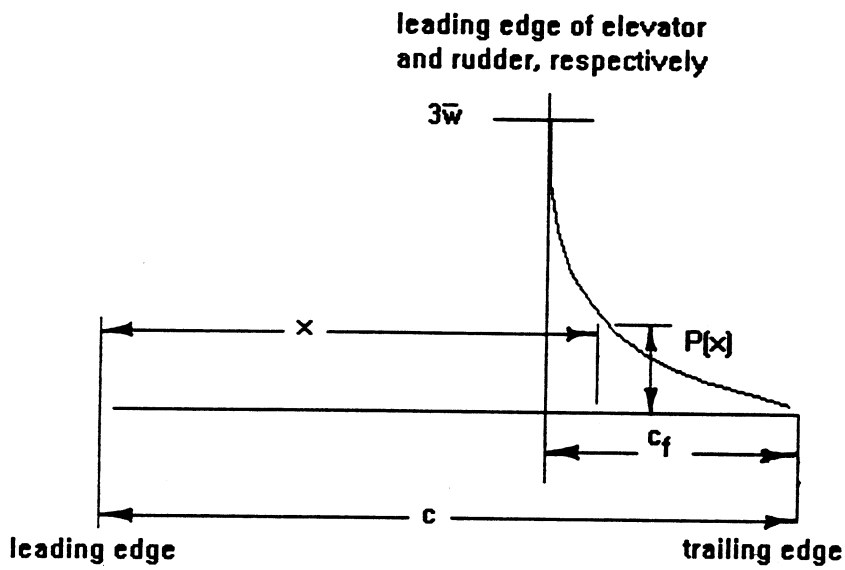

Where--

P(x) = local pressure at the chordwise stations x,

c = chord length of the tail surface,

cf = chord length of the elevator and rudder respectively, and

$\bar{w}$ = average surface loading as specified in Figure A5.

(vi) The chordwise loading distribution for ailerons, wing flaps, and trim tabs are specified in Table 2.

* * * * *

(d) Outboard fins. Outboard fins must meet the requirements of § 23.445.

* * * * *

Table 2 - Average limit control surface loading

AVERAGE LIMIT CONTROL SURFACE LOADING			
SURFACE	DIRECTION OF LOADING	MAGNITUDE OF LOADING	CHORDWISE DISTRIBUTION
Horizontal Tail I	a) Up and Down	Figure A5 Curve (2)	See Figure A7
	b) Unsymmetrical Loading (Up and Down)	100% $\bar{w}$ on one side of airplane ℄ 65% $\bar{w}$ on other side of airplane ℄ for normal and utility categories. For acrobatic category see A23.11(c)	
Vertical Tail II	Right and Left	Figure A5 Curve (1)	Same as above
Aileron III	a) Up and Down	Figure A6 Curve (5)	(C) 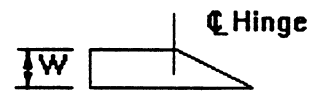
Wing Flap IV	a) Up	Figure A6 Curve (4)	(D)
	b) Down	.25 × Up Load (a)	
Trim Tab V	a) Up and Down	Figure A6 Curve (3)	Same as (D) above

NOTE: The surface loading I, II, III, and V above are based on speeds V_A min and V_C min.

The loading of IV is based on V_F min.

If values of speed <u>greater than</u> these minimums are selected for design, the appropriate surface loadings must be multiplied by the ratio $\left(\frac{V_{selected}}{V_{minimum}}\right)^2$.

For conditions I, II, III, and V the multiplying factor used must be the higher of

$$\left(\frac{V_A \text{ sel.}}{V_A \text{ min.}}\right)^2 \quad \text{or} \quad \left(\frac{V_C \text{ sel.}}{V_C \text{ min.}}\right)^2$$

* * * * *

FIGURE A7 – CHORDWISE LOAD DISTRIBUTION FOR STABILIZER AND ELEVATOR OR FIN AND RUDDER

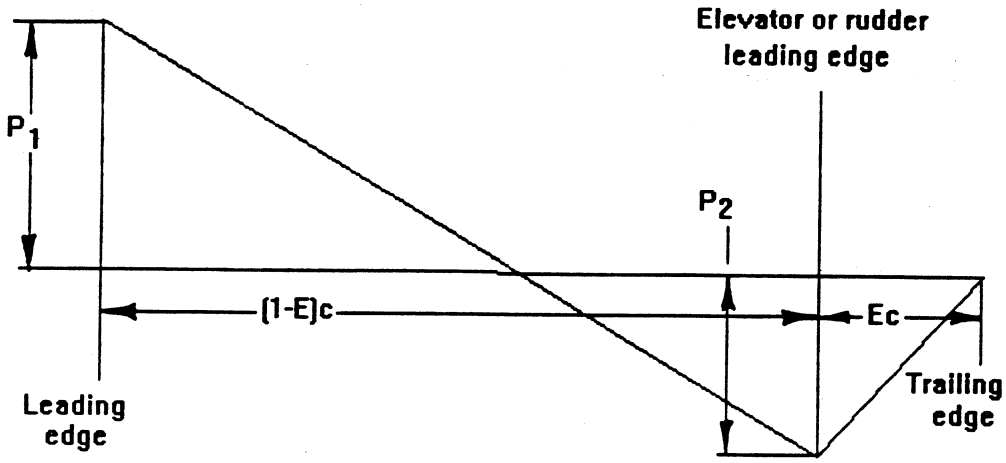

$$P_1 = 2\,\overline{(w)}\,\frac{(2 - E - 3d')}{(1 - E)}$$

$$P_2 = 2\,\overline{(w)}\,(3d' + E - 1)$$

where: $\overline{w}$ = average surface loading (as specified in figure A.5)

E = ratio of elevator (or rudder) chord to total stabilizer and elevator (or fin and rudder) chord.

d' = ratio of distance of center of pressure of a unit spanwise length of combined stabilizer and elevator (or fin and rudder) measured from stabilizer (or fin) leading edge to the local chord. Sign convention is positive when center of pressure is behind leading edge.

c = local chord.

Note: Positive values of $\overline{w}$, P_1 and P_2 are all measured in the same direction.

Issued in Washington D.C. on

FAA Action

5

Federal Aviation Administration

14 CFR Part 23

[Docket No. 27805; Amendment No. 23–48]

RIN 2120–AE62

Airworthiness Standards; Airframe Rules Based on European Joint Aviation Requirements

AGENCY: Federal Aviation Administration, DOT.

ACTION: Final rule.

SUMMARY: This final rule amends the airframe airworthiness standards for normal, utility, acrobatic, and commuter category airplanes. This amendment completes a portion of the Federal Aviation Administration (FAA) and the European Joint Aviation Authorities (JAA) effort to harmonize the Federal Aviation Regulations and the Joint Aviation Requirements (JAR) for airplanes certificated in these categories. This amendment will provide nearly uniform airframe airworthiness standards for airplanes certificated in the United States under 14 CFR part 23 and in the JAA countries under Joint Aviation Requirements 23, simplifying international airworthiness approval.

EFFECTIVE DATE: March 11, 1996.

FOR FURTHER INFORMATION CONTACT: Kenneth W. Payauys, ACE–111, Small Airplane Directorate, Aircraft Certification Service, Federal Aviation Administration, 601 East 12th Street, Kansas City, Missouri 64106; telephone (816) 426–5688.

SUPPLEMENTARY INFORMATION:

Background

This amendment is based on Notice of Proposed Rulemaking (NPRM) No. 94–20 (59 FR 35196, July 8, 1994). All comments received in response to Notice 94–20 have been considered in adopting this amendment.

This amendment completes part of an effort to harmonize the requirements of part 23 and JAR 23. The revisions to part 23 in this amendment largely pertain to airframe airworthiness standards. Three other final rules are being issued in this **Federal Register** that pertain to airworthiness standards for systems and equipment, flight, and powerplant. These related rulemakings are also part of the harmonization effort. Interested persons should review all four final rules to ensure that all revisions to part 23 are recognized.

The harmonization effort was initiated at a meeting in June 1990 of the JAA Council (consisting of JAA members from European countries) and the FAA, during which the FAA Administrator committed the FAA to support the harmonization of the U.S. regulations with the JAR that were being developed. In response to the commitment, the FAA Small Airplane Directorate established an FAA Harmonization Task Force to work with the JAR 23 Study Group to harmonize part 23 with the proposed JAR 23. The General Aviation Manufacturers Association (GAMA) also established a JAR 23/part 23 committee to provide technical assistance.

The FAA, JAA, GAMA, and the Association Europeenne des Constructeurs de Material Aerospatial (AECMA), an organization of European airframe manufacturers, met on several occasions in a continuing harmonization effort.

Near the end of the effort to harmonize the normal, utility, and acrobatic category airplane airworthiness standards, the JAA requested and received recommendations from its member countries on proposed airworthiness standards for commuter category airplanes. Subsequent JAA and FAA meetings on this issue resulted in proposals that were reflected in Notice 94–20 to revise portions of the part 23 commuter category airworthiness standards. Accordingly, this final rule adopts the airframe airworthiness standards for all part 23 airplanes.

In January 1991, the FAA established the Aviation Rulemaking Advisory Committee (ARAC) (56 FR 2190, January 22, 1991). At an FAA/JAA Harmonization Conference in Canada in June 1992, the FAA announced that it would consolidate the harmonization effort within the ARAC structure. The FAA assigned to ARAC the rulemakings related to JAR 23/part 23 harmonization, which ARAC assigned to the JAR/FAR 23 Harmonization Working Group. The proposal for airframe airworthiness standards contained in Notice No. 94–20 were a result of both the working group's efforts and the efforts at harmonization that occurred before the formation of the working group.

The JAA submitted comments to the FAA on January 20, 1994, in response to the four draft proposals for harmonization of the part 23 airworthiness standards. The JAA submitted comments again during the comment period of the NPRM. At the

April 26, 1995, ARAC JAR/FAR 23 Harmonization Working Group meeting, the JAA noted that many of the comments in the January 20 letter had been satisfied or were no longer relevant. The few remaining items concern issues that are considered beyond the scope of this rulemaking and, therefore, will be dealt with at future FAA/JAA Harmonization meetings.

Discussion of Comments

General

Interested persons were invited to participate in the development of these final rules by submitting written data, views, or arguments to the regulatory docket on or before October 28, 1994. Five commenters responded to Notice 94–20. Minor technical and editorial changes have been made to the proposed rules based on relevant comments received, consultation with the ARAC, and further review by the FAA

Discussion of Amendments

Section 23.301 Loads

The FAA proposed to amend § 23.301(d) by limiting the applicability of Appendix A to part 23 to "single-engine, excluding turbines" airplanes, rather than the current single-engine limitation. The effect of the proposed changes would be to eliminate alternative Appendix A airplane design requirements for turbine engines because the JAA determined, and the FAA agrees, that only single-engine airplanes, excluding turbines, were envisioned when Appendix A was introduced. Turbine airplane designs could continue to be FAA certificated by substantiation to part 23.

No comments were received on the proposal for this section, and it is adopted as proposed.

Section 23.335 Design Airspeeds

The FAA proposed to revise portions of § 23.335 for clarification and harmonization with JAR 23. The FAA proposed to revise paragraph (a)(1) by adding the phrase "wing loading at the design maximum takeoff weight" as a definition for W/S and by revising paragraphs (a)(1)(i) and (ii) to correct the equations for design cruise speed from "33 W/S" to √"33 (W/S)" and from "36 √W/S" to "36 √(W/S)."

The FAA proposed to revise § 23.335(b)(4) by adding a new paragraph (b)(4)(iii) that includes a new mach number speed margin, 0.07M, for commuter category airplanes. Because commuter category airplanes are normally operated at higher altitudes than normal, utility, and acrobatic category airplanes, they experience greater atmospheric variations, such as horizontal gusts and the penetration of jet streams or cold fronts; therefore, a higher minimum speed margin is required. The JAR proposed adding this mach number speed margin. The original mach number speed margin of 0.05M would be retained for normal, utility, and acrobatic category airplanes.

An incorrect equation, $\sqrt{n_g}\, V_{s1}$, appears in § 23.335(d)(1). This equation for the design speed for maximum gust intensity, V_B, is corrected to $V_{s1}\sqrt{(n_g)}$.

No comments were received on the proposals for this section, and they are adopted as proposed.

Section 23.337 Limit Maneuvering Load Factors

The FAA proposed to revise § 23.337(a)(1) by clarifying the equation and by adding a definition for "W." This definition of "W," "design maximum takeoff weight," was requested by the JAA to harmonize with JAR 23.

No comments were received on the proposal for this section, and it is adopted as proposed.

Section 23.341 Gust Load Factors

The FAA proposed to reorganize § 23.341 to provide a new paragraph (a), that would clarify that each airplane must be designed to withstand loads of each lifting surface that result from gusts specified in § 23.333(c). It also proposed to reorganize the section as follows: (1) Redesignate existing paragraphs (a) and (b) as (b) and (c), respectively; (2) revise the text of new paragraph (b) to delete the phrase "considering the criteria of § 23.333(c), to develop the gust loading on each lifting surface" since this requirement would be located in proposed paragraph (a); and, (3) revise new paragraph (c) to delete the phrase "for conventional configurations" because it is no longer accurate, and to revise the definition for wing loading (W/S).

No comments were received on the proposals for this section, and they are adopted as proposed.

Section 23.343 Design Fuel Loads

The FAA proposed a new § 23.343. The proposed requirement would apply to all part 23 airplane categories, except paragraph (c), which is limited to commuter category airplanes.

Comment: The JAA states that while the JAR 23 Study Group supports the technical intent of paragraph (c), since the JAA has no JAR 91 operating rule corresponding to part 91. The JAA must wait for an operating rule to be developed. The JAA has proposed a Notice of Proposed Action (NPA) to adopt paragraph (c) in JAR 23 if and when an operating rule for a 45-minute fuel reserve is created.

FAA Response: The FAA decided to continue with the final rule, as proposed.

This proposal is adopted as proposed.

Section 23.345 High Lift Devices

To place all "flap" requirements in one location, and to harmonize the requirements with JAR 23, the FAA proposed to revise § 23.345 as follows: (1) Make minor organizational, and non-substantive, clarifying changes; (2) Change the term "fully deflected" to "fully extended" because it more accurately describes flap conditions and positions; (3) Remove the phrase "resulting in limit load factors" because the requirement already exists in § 23.301(a); (4) Redesignate current paragraph (c) as paragraph (d) and revise it to include the flap requirements of § 23.457; (5) Redesignate current paragraph (d) as paragraph (c); and (6) Incorporate the flap requirements of § 23.457 into § 23.345(b) and § 23.345(d), as redesignated, and delete paragraph (e), which is redundant.

No comments were received on the proposals for this section, and they are adopted as proposed.

Section 23.347 Unsymmetrical Flight Conditions

The FAA proposed to revise § 23.347 to redesignate the existing text as paragraph (a) and to add a new paragraph (b) to include requirements for a flick maneuver (snap roll), if requested for acrobatic category airplanes.

No comments were received on the proposal for this section, and it is adopted as proposed.

Section 23.349 Rolling Conditions

The FAA proposed to revised § 23.349(a)(2) to simplify the unsymmetric semispan load assumption for normal, utility, and commuter category airplanes to 100 percent on one wing semispan and 75 percent on the other wing semispan for all design weights up through 19,000 pounds. The preamble to the NPRM did not include the explanation that the proposed 100 percent and 75 percent load distribution applied only to normal, utility, and commuter category airplanes. The NPRM did not include acrobatic category airplanes in this proposed requirement. However, the proposed regulatory language for § 23.349(c)(2) correctly reflects the FAA's intent.

While preparing the NPRM, the FAA had suggested varying the latter percentage linearly between 70 percent and 77.5 percent to include aircraft weighing up to 19,000 pounds. After discussion with the JAA, the FAA agreed that 75 percent is an appropriate assumption for all part 23 airplanes except acrobatic category airplanes.

No comments were received on the proposal for this section, and it is adopted as proposed.

Section 23.369 Rear Lift Truss

The FAA proposed to amend § 23.369 by amending the equation and by adding a definition for wing loading (W/S) to clarify the rule.

No comments were received on the proposal for this section, and it is adopted as proposed.

Section 23.371 Gyroscopic and Aerodynamic Loads

The FAA proposed to revise and reorganize § 23.371 by designating the existing text as paragraph (a) and adding new paragraphs (b) and (c).

The proposed revisions to the text of proposed paragraph (a) would delete the limitation for turbine powered engines; add inertial loads; and replace the word "engines" with "engine(s) and propeller(s), if applicable." The proposed changes clarify that these requirements apply to all part 23 airplanes.

The FAA proposed a new paragraph (b) to clarify and distinguish the requirements for airplanes approved for aerobatic maneuvers.

The FAA proposed new paragraph (c) to clarify that commuter category airplanes must comply with the gust conditions in § 23.341 in addition to the requirement of § 23.371(a).

Comment: The JAA recommended that the words "In addition," which appear at the beginning of JAR 23.371(b) but not in § 23.371(b), could result in misreading the requirements for airplanes approved for aerobatic maneuvers. The JAA's concern is that a reader might think that the requirements of paragraph (b) for airplanes approved for aerobatic maneuvers are in place of, rather than in addition to, the requirements of paragraph (a).

FAA Response: The FAA is aware that the words "in addition" appear in the JAR and understands that the JAA believes the words are necessary to prevent an interpretation that airplanes approved for aerobatic maneuvers need only comply with the requirements of paragraph (b).

Under standard rules of regulatory interpretation, it is not necessary to add the words "in addition" since the applicability of paragraph (a) should be based on its wording and not on the wording of paragraph (b). However, the FAA concludes that JAA's concern can be addressed by rewording paragraph (b) and new paragraph (c) to make it clear that persons subject to those paragraphs must meet both paragraphs (a) and certain additional requirements. As rewritten, paragraph (b) states "For airplanes approved for aerobatic maneuvers, each engine mount and its supporting structure must meet the requirements of paragraph (a) of this section and be designed to withstand the load factors expected during combined maximum yaw and pitch velocities." Paragraph (c) uses parallel language. Paragraph (c) would apply to aircraft certificated in the commuter category, whereas, as proposed, paragraph (b) would apply to aircraft "approved for aerobatic maneuvers," since this approval can be given for aircraft not certificated in the acrobatic category.

This proposal is adopted with the above changes.

Section 23.391 Control Surface Loads

The FAA proposed to revise § 23.391 by deleting paragraph (b). Paragraph (b) references Appendix B, which was removed by Amendment No. 23–42 (56 FR 344, January 3, 1991).

No comments were received on the proposal for this section, and it is adopted as proposed.

Section 23.393 Loads Parallel to Hinge Line

The FAA proposed a new § 23.393. Proposed new § 23.393 would contain a modified version of the requirement of § 23.657(c) concerning loads parallel to the hinge line, which were proposed to be deleted from § 23.657.

No comments were received on the proposal for this section, and it is adopted as proposed.

Section 23.399 Dual Control System

The FAA proposed to redesignate the text of § 23.399 as paragraph (a), and to add a new paragraph (b) that addresses the forces exerted on a dual control system when both pilots act together. This would clarify that it is the greater of the forces that apply.

No comments were received on the proposal for this section, and it is adopted as proposed.

Section 23.415 Ground Gust Conditions

The FAA proposed to amend § 23.415 by revising paragraph (a)(2) to add a definition for wing loading (W/S). The FAA also proposed to revise paragraph (c), which was added in Amendment No. 23–45 (58 FR 42136, August 6, 1993), to incorporate a more comprehensive tie-down criteria.

No comments were received on the proposals for this section, and it is adopted as proposed.

Section 23.441 Maneuvering Loads

The FAA proposed to revise § 23.441(b) to include a new design requirement for the vertical tail of a commuter category airplane.

Comment: The JAA comments that while the intent of the proposed requirement is the same as the comparable requirement in JAR 23, the wording is different. The JAA reported that the FAA proposed final rule version will be considered for full harmonization by the JAA through NPA action once the final rule is published.

FAA Response: The proposal is adopted as proposed.

Section 23.443 Gust Loads

The FAA proposed to revise § 23.443(c) by changing the format of the formula, revising the definition of weight ("W"), and correcting the subscripts of the distance to the lift center, ("l_{vt}"). The current definition reads "W=airplane weight (lbs.)." The new definition reads "W=the applicable weight of the airplane in the particular load case (lbs.)." These changes are for clarity.

No comments were received on the proposal for this section, and it is adopted as proposed.

Sections 23.455 Ailerons

The FAA proposed to amend the heading the precedes § 23.455 by deleting the term "Wing Flaps" so that the heading reads "AILERONS AND SPECIAL DEVICES." This change would reflect the deletion of the wing flap requirements from § 23.457 and their placement in § 23.345.

No comments were received on this proposal, and it is adopted as proposed.

Section 23.457 Wing Flaps

The FAA proposed to delete this section. As discussed under § 23.345, above, the wing flap requirements have been revised and consolidated in § 23.345 to group these requirements together.

No comments were received on the proposal for this section, and it is adopted as proposed.

Section 23.473 Ground Load Conditions and Assumptions

The FAA proposed to revise § 23.473(c)(1) to change the incorrect reference to "§ 23.67 (a) or (b)(1)" to "§ 23.67 (b)(1) or (c)."

Because the FAA intended that turbine powered airplanes be included in § 23.473(c)(1), since these airplanes are required to be "climb positive" with one engine inoperative, the FAA proposed that § 23.473(c)(1) also reference § 23.67(c). The FAA also determined that to achieve the intent described, § 23.473(c)(1) should also reference § 23.67 (b)(1) or (c).

The FAA also proposed to revise paragraph (f), which addresses energy absorption tests, to parallel the language of JAR 23.473(f). No substantive change from current paragraph (f) was proposed.

No comments were received on the proposals for this section, and they are adopted as proposed.

Section 23.497 Supplementary Conditions for Tail Wheels

The FAA proposed a new § 23.497(c) to relocate tail wheel, bumper, or energy absorption device design standards for airplanes with aft-mounted propellers. These requirements currently exist in § 23.925(b). They are being moved because the FAA determined that certain portions of the design standards for these devices more properly belong in Subpart C—Structure.

No comments were received on the proposal for this section, and it is adopted as proposed.

Section 23.499 Supplementary Conditions for Nose Wheels

The FAA proposed to add new paragraphs (d) and (e) to § 23.499 to establish nose wheel conditions for airplanes with a steerable nose wheel controlled by hydraulic or other power and for airplanes with a steerable wheel that has a direct mechanical connection to the rudder pedals.

Comment: The JAA comments that the phrase "has a mechanical connection to the rudder pedals" in proposed paragraph (e), absent appropriate advisory material, could be interpreted to require different technical solutions than the comparable wording in JAR 23, "directly connected mechanically to the rudder pedals."

FAA Response: The FAA agrees that the proposed language in paragraph (e) requires clarification; in the final rule, the word "direct" is inserted before the word "mechanical". Also, the last phrase of paragraph (e) is revised to read "the mechanism must be designed to withstand the steering torque for the maximum pilot forces specified in § 23.397(b)."

This proposal is adopted with the above changes to paragraph (e).

Section 23.521 Water Load Conditions

The FAA proposed to amend § 23.521 by deleting paragraph (c), which deals with previously approved floats, because the FAA agreed with the JAA that the requirements of paragraph (c) are covered by the general requirements of paragraph (a).

No comments were received on the proposal for this section, and it is adopted as proposed.

Section 23.561 General

The FAA proposed to amend § 23.561 by revising paragraphs (b) and (d), and adding a new paragraph (e). These changes simplify, clarify, and "add references * * * to ensure." The FAA proposed to revise paragraph (b), concerning occupant protection, to make it correspond to 14 CFR part 25 and JAR 25 that cover large airplanes. The proposed revision of paragraph (d), concerning turnovers would simplify and clarify the requirements without making substantive changes. The FAA proposed a new paragraph (e) to ensure that items of mass that could injure an occupant are retained by the supporting structure.

No comments were received on the proposals for this section, and they are adopted as proposed.

Section 23.571 Metallic Pressurized Cabin Structures

The FAA proposed to revise § 23.571 by changing the heading from "Pressurized cabin" to "Metallic pressurized cabin structures" because nonmetallic structure is addressed in § 23.573(a). The FAA proposed to revise the introductory text to limit the applicability to normal, utility, and acrobatic categories because commuter category airplanes are addressed separately. The FAA proposed to revise paragraph (a) to require the fatigue strength investigation to show that the structure can withstand repeated loads of variable magnitude expected in service.

Comment: The JAA comments that the JAR will be revised to delete commuter category airplanes from this section. Kal-Aero comments that a literal interpretation of the proposed changes to §§ 23.571 and 23.572 "would require that every subsequent modification to an aircraft have a fatigue program to substantiate each major repair or alteration." Kal-Aero states that this change is both uneconomical (Kal-Aero estimates a part 23 fatigue test could cost at least $20 million per certification) and is unnecessary.

FAA Response: The FAA does not agree that the proposed rule language would require the result suggested by Kal-Aero. The intent is to provide that there be some test evidence to verify the analysis validity. The amount of test evidence needed would depend on the complexity of the design. The FAA points out that this evidence would be required only when fatigue analysis is used to satisfy the type certification requirements.

The proposals for this section are adopted as proposed.

Section 23.572 Metallic Wing, Empennage, and Associated Structures

The FAA proposed to revise the section heading to add the word "metallic," to revise paragraph (a) to limit the applicability to normal, utility, and acrobatic category airplanes, and to make minor editorial changes. Paragraph (a)(1) would be revised to harmonize with JAR 23 by requiring tests, or analysis supported by test evidence, as discussed under § 23.571 of this preamble.

The only comment received on this section is from Kal-Aero, and applies to this section and to § 23.571. The comment was discussed under § 23.571.

The proposals are adopted as proposed.

Section 23.573 Damage Tolerance and Fatigue Evaluation of Structure

The FAA proposed to amend § 23.573(a)(5) to make clear that the limit load capacity of a bonded joint must be substantiated only if the failure of the bonded joint would result in catastrophic loss of the airplane.

The FAA proposed to delete § 23.573(c) because its requirements for inspections and other procedures were proposed to be moved to § 23.575.

No comments were received on the proposals for this section, and they are adopted as proposed.

Section 23.574 Metallic Damage Tolerance and Fatigue Evaluation of Commuter Category Airplanes

The FAA proposed to add a new § 23.574 that addresses damage tolerance and fatigue evaluation requirements for commuter category airplanes. As discussed previously, §§ 23.571 and 23.572 are being revised to clarify that these sections apply only to normal, utility, and acrobatic category airplanes. Newly type certificated commuter category airplanes would have to meet proposed § 23.574 instead of §§ 23.571 and 23.572.

The only comment received on this proposed new section is a JAA statement that this change will be considered for JAR 23. The proposal is adopted as proposed.

Section 23.575 Inspections and Other Procedures

The FAA proposed to add a new § 23.575 to clarify that airplane manufacturers are required to provide recommendations for inspections frequencies, locations, and methods when a design is approved by the FAA, and that these items must be included in the Limitations Section of the Instructions for Continued Airworthiness required by § 23.1529.

The requirements of § 23.573(c) would be moved to § 23.575 and the requirements are made applicable to §§ 23.571, 23.572, 23.573 and 23.574.

The only comment on this proposed new section is a JAA statement that this change will be considered for JAR 23. The proposals are adopted as proposed.

Section 23.607 Fasteners

The FAA proposed to amend § 23.607 by changing the section heading, by redesignating the existing text as paragraph (c), and by adding new paragraphs (a) and (b), as outlined in the NPRM.

Comment: Transport Canada comments that it is possible the language of proposed paragraph (a) could be interpreted to mean that compliance is satisfied by the use of a self-locking nut alone in certain situations, such as when a bolt is not subject to rotation. Transport Canada suggests adopting the wording of § 27.607, which requires "two separate locking devices" when the loss of a removable bolt, screw, nut, pin or other fastener would jeopardize the safe operation of the aircraft.

FAA Response: The FAA agrees that the proposed language of paragraph (a) could be misinterpreted and that the intent of the section would be clearer if language comparable to § 27.607 is used. Also, the FAA finds that the section is clearer if it addresses all removable fasteners without specific mention of bolts, screws, nuts, pins, etc. Accordingly, paragraph (a) has been revised to read "Each removable fastener must incorporate two retaining devices if the loss of such fastener would preclude continued safe flight and landing" in the final rule.

This proposal is adopted with the noted change to paragraph (a).

Section 23.611 Accessibility Provisions

The FAA proposed to amend § 23.611 to require that, for any part requiring maintenance, such as an inspection or other servicing, there must be a means of access incorporated into the aircraft design to allow this servicing to be accomplished. The FAA pointed out in the NPRM that whether the access provided is appropriate in a particular case will depend on the nature of the item and the frequency and complexity of the required inspection or maintenance actions.

The only comment received on this proposed change is a JAA statement that this change will be considered for the JAR. The proposal is adopted as proposed.

Section 23.629 Flutter

The FAA proposed to revise § 23.629 to require either flight flutter tests and rational analysis, or flight flutter tests and compliance with the FAA's "Simplified Flutter Prevention Criteria." Section 23.629 currently requires flutter substantiation by only one of three methods: A rational analysis, flight flutter test, or compliance with the "Simplified Flutter Prevention Criteria."

The FAA also proposed to revise paragraph (d)(3)(i) to change the phrase "T-tail or boom tail" to "T-tail or other unconventional tail configurations" to be more inclusive and to represent the standard used in current certification. The FAA also proposed to harmonize with JAR 23 by amending paragraphs 23.629 (g) and (h) to remove the "or test" phrase to require that substantiation be done only by analysis. The FAA proposed a new paragraph (i) that would allow freedom from flutter to be shown by tests (under paragraph (a)) or by analysis alone if that analysis is based on previously approved data for an airplane that has undergone modification that could affect its flutter characteristics.

No comments were received on the proposals for this section, and they are adopted as proposed.

Section 23.657 Hinges

The FAA proposed to amend § 23.657 by deleting paragraph (c) that covers loads parallel to the hinge line because it would be covered in proposed § 23.393.

No comments were received on the proposal for this section, and it is adopted as proposed.

Section 23.673 Primary Flight Controls

The FAA proposed to revise § 23.673 to delete the requirements for two-control airplanes consistent with actions being taken in the proposed rule on flight requirements for part 23 airplanes (Docket No. 27807, Notice No. 94–22; (59 FR 37878, July 25, 1994)) that affect §§ 23.177 and 23.201. The two-control requirements are considered obsolete. Additionally, harmonization with JAR 23 would be accomplished by this action.

No comments were received on the proposal for this section, and it is adopted as proposed.

Section 23.725 Limit Drop Tests

The FAA proposed to amend the effective weight equation in § 23.725(b) by adding mathematical brackets to the numerator and parentheses to the denominator to clarify the equation.

No comments were received on the proposal for this section, and it is adopted as proposed.

Section 23.755 Hulls

The FAA proposed to amend § 23.755 by deleting paragraph (b), which provides, that hulls of hull seaplanes or amphibians of less than 1,500 pounds need not be compartmented, because paragraph (b) is redundant. The applicable requirements are contained in paragraph (a). The FAA also proposed to redesignate paragraph (c) as new paragraph (b) and to edit it for clarification.

No comments were received on the proposals for this section, and they are adopted as proposed.

Section 23.865 Fire Protection of Flight Controls, Engine Mounts, and Other Flight Structures

The FAA proposed to revise § 23.865 by changing the words "engine compartment" to "designated fire zones" for consistency with recent revisions to §§ 23.1203 and 23.1181. The proposed revision would also add the phrase "adjacent areas that would be subjected to the effects of fire in the designated fire zones."

Comment: The JAA agrees that the technical intent of proposed § 23.865 is similar to the JAR 23 requirement. Changes to JAR 23 to adopt the terms proposed in this part 23 section are being considered by the JAA.

FAA Response: No substantive comment was received, and the proposals are adopted as proposed.

Section 23.925 Propeller Clearance

The FAA proposed to amend § 23.925(b), Aft mounted propellers, by removing the requirements on tail wheels, bumpers, and energy absorption devices and moving them to § 23.497, Supplementary conditions for tail wheels, as discussed as discussed above. The FAA also proposed to delete the inspection and replacement criteria for tail wheel, bumper, and energy absorption devices because the inspection and replacement requirements are stated in § 23.1529.

No comments were received on the proposals for this section, and they are adopted as proposed.

Appendix A

The FAA proposed to revise three areas of Appendix A: (1) A23.1 General; (2) A23.11 Control surface loads, paragraph (c), Surface loading conditions; and (3) Table 2—Average limit control surface loading. The FAA proposed to add a new figure to Appendix A: Figure A7, Chordwise load distribution for stabilizer and elevator, or fin and rudder. The revisions specify the configurations for which the wing and tail surface loads, required by A23.7, are valid. The FAA discovered a need for a clarification change in paragraph A23.a(a)(1) during the post comment review period. The words "excluding turbine powerplants" are clearer than the words "excluding turbines." This revision is included in the final rule to more clearly convey the intended meaning.

No comments were received on the proposals for Appendix A, and they are adopted with the change explained above.

Final Regulatory Evaluation, Final Regulatory Flexibility Determination, and Trade Impact Assessment

Changes to Federal regulations must undergo several economic analyses. First, Executive Order 12866 directs Federal agencies to promulgate new regulations only if the potential benefits to society justify its costs. Second, the Regulatory Flexibility Act of 1980 requires agencies to analyze the economic impact of regulatory changes on small entities. Finally, the Office of Management and Budget directs agencies to assess the effects of regulatory changes on international trade. In conducting these assessments, the FAA has determined that this rule: (1) Will generate benefits exceeding its costs and is "significant" as defined in the Executive Order; (2) is "significant" as defined in DOT's Policies and Procedures; (3) will not have a significant impact on a substantial number of small entities; and (4) will not constitute a barrier to international trade. These analyses, available in the docket, are summarized below.

Comments Related to the Economics of the Proposed Rule

Two comments were received regarding the economic impact of the proposals; one concerning § 23.571, Metallic pressurized cabin structures, and one concerning § 23.572, Metallic wing, empennage, and associated structures. Both of these comments, as well as the FAA's responses, are included in the section "Discussion of Amendments."

Regulatory Evaluation Summary

The FAA has identified 6 sections that will result in additional compliance costs, totalling between $10,000 and $17,000 per certification. When amortized over a production run, these costs will have a negligible impact on airplane price, less than $100 per airplane.

The primary benefit of the rule will be the cost efficiencies of harmonization with the JAR for those manufacturers that market airplanes in JAA countries as well as to manufacturers in JAA countries that market airplanes in the United States. Other benefits of the rule will be decreased reliance on special conditions, simplification of the certification process through clarification of existing requirements, and increased flexibility through optional designs.

Regulatory Flexibility Determination

The Regulatory Flexibility Act of 1980 (RFA) was enacted by Congress to ensure that small entities are not unnecessarily and disproportionately burdened by Federal regulations. The RFA requires a Regulatory Flexibility Analysis if a rule will have a significant economic impact, either detrimental or beneficial, on a substantial number of small entities. Based on FAA Order 2100.14A, Regulatory Flexibility Criteria and Guidance, the FAA has determined that the rule will not have a significant economic impact on a substantial number of small entities.

International Trade Impact Assessment

The rule will not constitute a barrier to international trade, including the export of U.S. goods and services to foreign countries and the import of foreign goods and services into the United States. Instead, the airframe certification procedures have been harmonized with those of the JAA and will lessen restraints on trade.

Federalism Implications

The regulations herein would not have substantial direct effects on the States, on the relationship between the national government and the States, or on the distribution of power and responsibilities among the various levels of government. Therefore, in accordance with Executive Order 12612, it is determined that this rule does not have sufficient federalism implications to warrant the preparation of a Federalism Assessment.

Conclusion

The FAA is revising the airframe airworthiness standards for normal, utility, acrobatic, and commuter category airplanes to harmonize them with the standards that were published for the same categories of airplanes by the Joint Airworthiness Authorities in Europe. The revisions reduce the regulatory burden on United States and European airplane manufacturers by relieving them of the need to show compliance with different standards each time they seek certification approval of an airplane in the United States or in a country that is a member of the JAA.

For the reasons discussed in the preamble, and based on the findings in the Regulatory Evaluation, the FAA has determined that this rule is not significant under Executive Order 12866. In addition, the FAA certifies that this rule will not have a significant economic impact on a substantial number of small entities under the criteria of the Regulatory Flexibility Act. This rule is considered not significant under DOT Regulatory Policies and Procedures (44 FR 11034, February 26, 1979). A regulatory evaluation of the rule has been placed in the docket. A copy may be obtained by contacting the person identified under **FOR FURTHER INFORMATION CONTACT.**

List of Subjects in 14 CFR Part 23

Aircraft, Aviation safety, Signs and symbols.

The Amendments

In consideration of the foregoing, the Federal Aviation Administration amends 14 CFR part 23 as follows:

PART 23—AIRWORTHINESS STANDARDS: NORMAL, UTILITY, ACROBATIC, AND COMMUTER CATEGORY AIRPLANES

1. The authority citation for part 23 continues to read as follows:

Authority: 49 U.S.C. 106(g), 40013, 44701, 44702, 44704.

2. Section 23.301(d) is revised to read as follows:

§ 23.301 Loads.

* * * * *

(d) Simplified structural design criteria may be used if they result in design loads not less than those prescribed in §§ 23.331 through 23.521. For airplane configurations described in appendix A, § 23.1, the design criteria of appendix A of this part are an approved equivalent of §§ 23.321 through 23.459. If appendix A of this part is used, the entire appendix must be substituted for the corresponding sections of this part.

3. Section 23.335 is amended by revising paragraph (a)(1); by removing the period and adding "; and either—"

to the end of paragraph (b)(4)(i); by revising paragraph (b)(4)(ii); by adding a new paragraph (b)(4)(iii); and by revising the introductory text of paragraph (d)(1) to read as follows:

§ 23.335 Design airspeeds.

* * * * *

(a) * * *

(1) Where W/S'=wing loading at the design maximum takeoff weight, V_c (in knots) may not be less than—

(i) 33 √(W/S) (for normal, utility, and commuter category airplanes);

(ii) 36 √(W/S) (for acrobatic category airplanes).

* * * * *

(b) * * *

(4) * * *

(ii) Mach 0.05 for normal, utility, and acrobatic category airplanes (at altitudes where M_D is established); or

(iii) Mach 0.07 for commuter category airplanes (at altitudes where M_D is established) unless a rational analysis, including the effects of automatic systems, is used to determine a lower margin. If a rational analysis is used, the minimum speed margin must be enough to provide for atmospheric variations (such as horizontal gusts), and the penetration of jet streams or cold fronts), instrument errors, airframe production variations, and must not be less than Mach 0.05.

* * * * *

(d) * * *

(1) V_B may not be less than the speed determined by the intersection of the line representing the maximum positive lift, $C_{N\ MAX}$, and the line representing the rough air gust velocity on the gust V-n diagram, or $V_{S1}\sqrt{n_g}$, whichever is less, where:

* * * * *

4. Section 23.337(a)(1) is revised to read as follows:

§ 23.337 Limit maneuvering load factors.

(a) * * *

(1) 2.1+(24,000÷(W+10,000)) for normal and commuter category airplanes, where W=design maximum takeoff weight, except that n need not be more than 3.8;

* * * * *

5. Section 23.341 is amended by redesignating existing paragraphs (a) and (b) as paragraphs (b) and (c), respectively; by adding a new paragraph (a); by revising the redesignated paragraph (b); and by revising the introductory text, the formula, and the definition of "W/S" in the redesignated paragraph (c) to read as follows:

§ 23.341 Gust loads factors.

(a) Each airplane must be designed to withstand loads on each lifting surface resulting from gusts specified in § 23.333(c).

(b) The gust load for a canard or tandem wing configuration must be computed using a rational analysis, or may be computed in accordance with paragraph (c) of this section, provided that the resulting net loads are shown to be conservative with respect to the gust criteria of § 23.333(c).

(c) In the absence of a more rational analysis, the gust load factors must be computed as follows—

$$n = 1 + \frac{K_g U_{de} V a}{498\,(W/S)}$$

* * * * *

W/S=Wing loading (p.s.f.) due to the applicable weight of the airplane in the particular load case.

* * * * *

6. A new § 23.343 is added to read as follows:

§ 23.343 Design fuel loads.

(a) The disposable load combinations must include each fuel load in the range from zero fuel to the selected maximum fuel load.

(b) If fuel is carried in the wings, the maximum allowable weight of the airplane without any fuel in the wing tank(s) must be established as "maximum zero wing fuel weight," if it is less than the maximum weight.

(c) For commuter category airplanes, a structural reserve fuel condition, not exceeding fuel necessary for 45 minutes of operation at maximum continuous power, may be selected. If a structural reserve fuel condition is selected, it must be used as the minimum fuel weight condition for showing compliance with the flight load requirements prescribed in this part and—

(1) The structure must be designed to withstand a condition of zero fuel in the wing at limit loads corresponding to:

(i) Ninety percent of the maneuvering load factors defined in § 23.337, and

(ii) Gust velocities equal to 85 percent of the values prescribed in § 23.333(c).

(2) The fatigue evaluation of the structure must account for any increase in operating stresses resulting from the design condition of paragraph (c)(1) of this section.

(3) The flutter, deformation, and vibration requirements must also be met with zero fuel in the wings.

7. Section 23.345 is revised to read as follows:

§ 23.345 High lift devices.

(a) If flaps or similar high lift devices are to be used for takeoff, approach or landing, the airplane, with the flaps fully extended at V_F, is assumed to be subjected to symmetrical maneuvers and gusts within the range determined by—

(1) Maneuvering, to a positive limit load factor of 2.0; and

(2) Positive and negative gust of 25 feet per second acting normal to the flight path in level flight.

(b) V_F must be assumed to be not less than 1.4 V_S or 1.8 V_{SF}, whichever is greater, where—

(1) V_S is the computed stalling speed with flaps retracted at the design weight; and

(2) V_{SF} is the computed stalling speed with flaps fully extended at the design weight.

(3) If an automatic flap load limiting device is used, the airplane may be designed for the critical combinations of airspeed and flap position allowed by that device.

(c) In determining external loads on the airplane as a whole, thrust, slipstream, and pitching acceleration may be assumed to be zero.

(d) The flaps, their operating mechanism, and their supporting structures, must be designed to withstand the conditions prescribed in paragraph (a) of this section. In addition, with the flaps fully extended at V_F, the following conditions, taken separately, must be accounted for:

(1) A head-on gust having a velocity of 25 feet per second (EAS), combined with propeller slipstream corresponding to 75 percent of maximum continuous power; and

(2) The effects of propeller slipstream corresponding to maximum takeoff power.

8. Section 23.347 is amended by designating the existing text as paragraph (a) and by adding a new paragraph (b) to read as follows:

§ 23.347 Unsymmetrical flight conditions.

* * * * *

(b) Acrobatic category airplanes certified for flick maneuvers (snap roll) must be designed for additional asymmetric loads acting on the wing and the horizontal tail.

9. Section 23.349(a)(2) is revised to read as follows:

§ 23.349 Rolling conditions.

* * * * *

(a) * * *

(2) For normal, utility, and commuter categories, in Condition A, assume that 100 percent of the semispan wing airload acts on one side of the airplane and 75 percent of this load acts on the other side.

* * * * *

10. Section 23.369(a) is revised to read as follows:

§ 23.369 Rear lift truss.

(a) If a rear lift truss is used, it must be designed to withstand conditions of reversed airflow at a design speed of—

$V = 8.7 \sqrt{(W/S)} + 8.7$ (knots), where W/S = wing loading at design maximum takeoff weight.

* * * * *

11. Section 23.371 is revised to read as follows:

§ 23.371 Gyroscopic and aerodynamic loads.

(a) Each engine mount and its supporting structure must be designed for the gyroscopic, inertial, and aerodynamic loads that result, with the engine(s) and propeller(s), if applicable, at maximum continuous r.p.m., under either:

(1) The conditions prescribed in § 23.351 and § 23.423; or

(2) All possible combinations of the following—

(i) A yaw velocity of 2.5 radians per second;

(ii) A pitch velocity of 1.0 radian per second;

(iii) A normal load factor of 2.5; and

(iv) Maximum continuous thrust.

(b) For airplanes approved for aerobatic maneuvers, each engine mount and its supporting structure must meet the requirements of paragraph (a) of this section and be designed to withstand the load factors expected during combined maximum yaw and pitch velocities.

(c) For airplanes certificated in the commuter category, each engine mount and its supporting structure must meet the requirements of paragraph (a) of this section and the gust conditions specified in § 23.341 of this part.

§ 23.391 [Amended]

12. Section 23.391 is amended by removing paragraph (b) and removing the designation of "(a)" from the remaining text.

13. A new § 23.393 is added to read as follows:

§ 23.393 Loads parallel to hinge line.

(a) Control surfaces and supporting hinge brackets must be designed to withstand inertial loads acting parallel to the hinge line.

(b) In the absence of more rational data, the inertial loads may be assumed to be equal to KW, where—

(1) K = 24 for vertical surfaces;

(2) K = 12 for horizontal surfaces; and

(3) W = weight of the movable surfaces.

14. Section 23.399 is revised to read as follows:

§ 23.399 Dual control system.

(a) Each dual control system must be designed to withstand the force of the pilots operating in opposition, using individual pilot forces not less than the greater of—

(1) 0.75 times those obtained under § 23.395; or

(2) The minimum forces specified in § 23.397(b).

(b) Each dual control system must be designed to withstand the force of the pilots applied together, in the same direction, using individual pilot forces not less than 0.75 times those obtained under § 23.395.

15. Section 23.415 is amended by revising paragraphs (a)(2) and (c) to read as follows:

§ 23.415 Ground gust conditions.

(a) * * *

(2) If pilot forces less than the minimums specified in § 23.397(b) are used for design, the effects of surface loads due to ground gusts and taxiing downwind must be investigated for the entire control system according to the formula:

$H = K c S q$

where—

H = limit hinge moment (ft.-lbs.);

c = mean chord of the control surface aft of the hinge line (ft.);

S = area of control surface aft of the hinge line (sq. ft.);

q = dynamic pressure (p.s.f.) based on a design speed not less than $14.6 \sqrt{(W/S)} + 14.6$ (f.p.s.) where W/S = wing loading at design maximum weight, except that the design speed need not exceed 88 (f.p.s.);

K = limit hinge moment factor for ground gusts derived in paragraph (b) of this section. (For ailerons and elevators, a positive value of K indicates a moment tending to depress the surface and a negative value of K indicates a moment tending to raise the surface).

* * * * *

(c) At all weights between the empty weight and the maximum weight declared for tie-down stated in the appropriate manual, any declared tie-down points and surrounding structure, control system, surfaces and associated gust locks, must be designed to withstand the limit load conditions that exist when the airplane is tied down and that result from wind speeds of up to 65 knots horizontally from any direction.

16. Section 23.441 is amended by revising paragraph (a)(2) and adding a new paragraph (b) to read as follows.

§ 23.441 Maneuvering loads.

(a) * * *

(2) With the rudder deflected as specified in paragraph (a)(1) of this section, it is assumed that the airplane yaws to the overswing sideslip angle. In lieu of a rational analysis, an overswing angle equal to 1.5 times the static sideslip angle of paragraph (a)(3) of this section may be assumed.

* * * * *

(b) For commuter category airplanes, the loads imposed by the following additional maneuver must be substantiated at speeds from V_A to V_D/M_D. When computing the tail loads—

(1) The airplane must be yawed to the largest attainable steady state sideslip angle, with the rudder at maximum deflection caused by any one of the following:

(i) Control surface stops;

(ii) Maximum available booster effort;

(iii) Maximum pilot rudder force as shown below:

BILLING CODE 4910–13–M

~ME134E.DOC

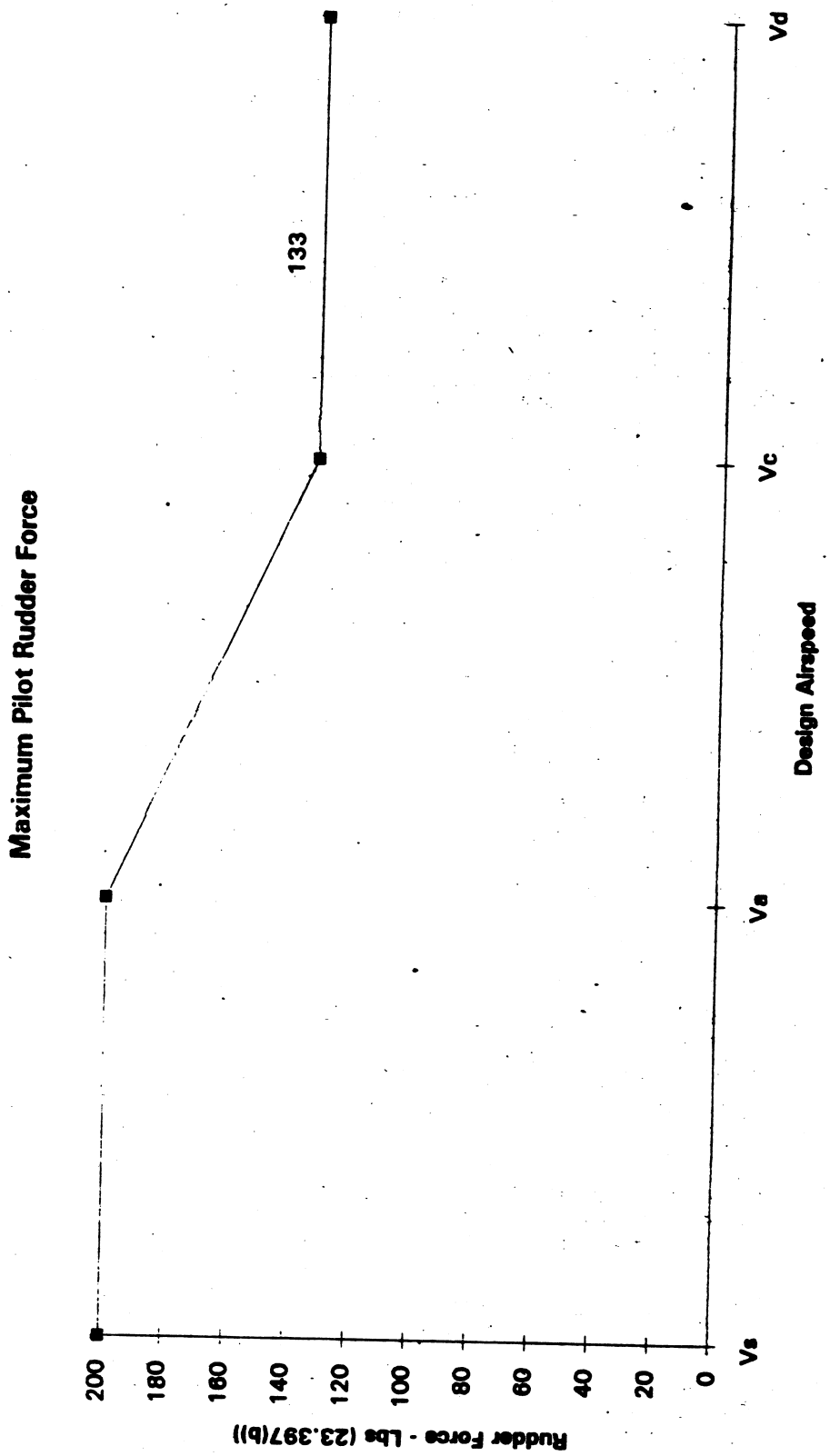

BILLING CODE 4910–13–C

(2) The rudder must be suddenly displaced from the maximum deflection to the neutral position.

* * * * *

17. Section 23.443(c) is revised to read as follows:

§ 23.443 Gust loads.

* * * * *

(c) In the absence of a more rational analysis, the gust load must be computed as follows:

$$L_{vt} = \frac{K_{gt}\, U_{de}\, V\, a_{vt}\, S_{vt}}{498}$$

Where—

L_{vt}=Vertical surface loads (lbs.);

$$k_{gt} = \frac{0.88\,\mu_{gt}}{5.3+\mu_{gt}} = \text{gust alleviation factor;}$$

$$\mu_{gt} = \frac{2W}{\rho c_t g\, a_{vt} S_{vt}} \frac{K^2}{l_{vt}} = \text{lateral mass ratio;}$$

U_{de}=Derived gust velocity (f.p.s.);

ρ=Air density (slugs/cu.ft.);

W=the applicable weight of the airplane in the particular load case (lbs.);

S_{vt}=Area of vertical surface (ft.^{2});

$\bar{c}_t$=Mean geometric chord of vertical surface (ft.);

a_{vt}=Lift curve slope of vertical surface (per radian);

K=Radius of gyration in yaw (ft.);

l_{vt}=Distance from airplane c.g. to lift center of vertical surface (ft.);

g=Acceleration due to gravity (ft./sec.^{2}); and

V=Equivalent airspeed (knots).

18. The center heading "AILERONS, WING FLAPS, AND SPECIAL DEVICES" that appears between §§ 23.445 and 23.455 is revised to read "Ailerons and Special Devices".

§ 23.457 [Removed]

19. Section 23.457 is removed.

20. Section 23.473 is amended by revising paragraphs (c)(1) and (f) to read as follows:

§ 23.473 Ground load conditions and assumptions.

* * * * *

(c) * * *

(1) The airplane meets the one-engine-inoperative climb requirements of § 23.67(b)(1) or (c); and

* * * * *

(f) If energy absorption tests are made to determine the limit load factor corresponding to the required limit descent velocities, these tests must be made under § 23.723(a).

* * * * *

21. Section 23.497 is amended by adding a new paragraph (c) to read as follows:

§ 23.497 Supplementary conditions for tail wheels.

* * * * *

(c) If a tail wheel, bumper, or an energy absorption device is provided to show compliance with § 23.925(b), the following apply:

(1) Suitable design loads must be established for the tail wheel, bumper, or energy absorption device; and

(2) The supporting structure of the tail wheel, bumper, or energy absorption device must be designed to withstand the loads established in paragraph (c)(1) of this section.

22. Section 23.499 is amended by adding new paragraphs (d) and (e) to read as follows:

§ 23.499 Supplementary conditions for nose wheels.

* * * * *

(d) For airplanes with a steerable nose wheel that is controlled by hydraulic or other power, at design takeoff weight with the nose wheel in any steerable position, the application of 1.33 times the full steering torque combined with a vertical reaction equal to 1.33 times the maximum static reaction on the nose gear must be assumed. However, if a torque limiting device is installed, the steering torque can be reduced to the maximum value allowed by that device.

(e) For airplanes with a steerable nose wheel that has a direct mechanical connection to the rudder pedals, the mechanism must be designed to withstand the steering torque for the maximum pilot forces specified in § 23.397(b).

§ 23.521 [Amended]

23. Section 23.521 is amended by removing paragraph (c).

24. Section 23.561 is amended by revising paragraph (b) introductory text; by revising paragraphs (d)(1); and by adding a new paragraph (e) to read as follows:

§ 23.561 General.

* * * * *

(b) The structure must be designed to give each occupant every reasonable chance of escaping serious injury when—

* * * * *

(d) * * *

(1) * * *

(i) The most adverse combination of weight and center of gravity position;

(ii) Longitudinal load factor of 9.0g;

(iii) Vertical load factor of 1.0g; and

(iv) For airplanes with tricycle landing gear, the nose wheel strut failed with the nose contacting the ground.

* * * * *

(e) Except as provided in § 23.787(c), the supporting structure must be designed to restrain, under loads up to those specified in paragraph (b)(3) of this section, each item of mass that could injure an occupant if it came loose in a minor crash landing.

25. Section 23.571 is amended by revising the heading, the introductory text, and paragraph (a), to read as follows:

§ 23.571 Metallic pressurized cabin structures.

For normal, utility, and acrobatic category airplanes, the strength, detail design, and fabrication of the metallic structure of the pressure cabin must be evaluated under one of the following:

(a) A fatigue strength investigation in which the structure is shown by tests, or by analysis supported by test evidence, to be able to withstand the repeated loads of variable magnitude expected in service; or

* * * * *

26. Section 23.572 is amended by revising the heading; by revising paragraph (a) introductory text; and by revising paragraph (a)(1) to read as follows:

§ 23.572 Metallic wing, empennage, and associated structures.

(a) For normal, utility, and acrobatic category airplanes, the strength, detail design, and fabrication of those parts of the airframe structure whose failure would be catastrophic must be evaluated under one of the following unless it is shown that the structure, operating stress level, materials and expected uses are comparable, from a fatigue standpoint, to a similar design that has had extensive satisfactory service experience:

(1) A fatigue strength investigation in which the structure is shown by tests, or by analysis supported by test evidence, to be able to withstand the repeated loads of variable magnitude expected in service; or

* * * * *

27. Section 23.573 is amended by removing the reference in paragraph (b) "§ 23.571(c)" and adding the reference "§ 23.571(a)(3)" in its place; by removing paragraph (c); and by revising the introductory text of paragraph (a)(5) to read as follows:

§ 23.573 Damage tolerance and fatigue evaluation of structure.

(a) * * *

(5) For any bonded joint, the failure of which would result in catastrophic loss of the airplane, the limit load capacity must be substantiated by one of the following methods—

* * * * *

28. A new § 23.574 is added to read as follows:

§ 23.574 Metallic damage tolerance and fatigue evaluation of commuter category airplanes.

For commuter category airplanes—

(a) *Metallic damage tolerance.* An evaluation of the strength, detail design, and fabrication must show that catastrophic failure due to fatigue, corrosion, defects, or damage will be avoided throughout the operational life of the airplane. This evaluation must be conducted in accordance with the provisions of § 23.573, except as specified in paragraph (b) of this section, for each part of the structure that could contribute to a catastrophic failure.

(b) *Fatigue (safe-life) evaluation.* Compliance with the damage tolerance requirements of paragraph (a) of this section is not required if the applicant establishes that the application of those requirements is impractical for a particular structure. This structure must be shown, by analysis supported by test evidence, to be able to withstand the repeated loads of variable magnitude expected during its service life without detectable cracks. Appropriate safe-life scatter factors must be applied.

29. A new § 23.575 is added to read as follows:

§ 23.575 Inspections and other procedures.

Each inspection or other procedure, based on an evaluation required by §§ 23.571, 23.572, 23.573 or 23.574, must be established to prevent catastrophic failure and must be included in the Limitations Section of the Instructions for Continued Airworthiness required by § 23.1529.

30. Section 23.607 is revised to read as follows:

§ 23.607 Fasteners.

(a) Each removable fastener must incorporate two retaining devices if the loss of such fastener would preclude continued safe flight and landing.

(b) Fasteners and their locking devices must not be adversely affected by the environmental conditions associated with the particular installation.

(c) No self-locking nut may be used on any bolt subject to rotation in operation unless a non-friction locking device is used in addition to the self-locking device.

31. Section 23.611 is revised to read as follows:

§ 23.611 Accessibility provisions.

For each part that requires maintenance, inspection, or other servicing, appropriate means must be incorporated into the aircraft design to allow such servicing to be accomplished.

32. Section 23.629 is amended by revising the introductory text of paragraph (a); by redesignating existing paragraphs (b) and (c) as paragraphs (c) and (b); by revising the introductory text of newly redesignated (b); by revising newly redesignated paragraph (c); by revising paragraph (d)(3)(i); by revising paragraphs (g) and (h); and by adding a new paragraph (i) to read as follows:

§ 23.629 Flutter.

(a) It must be shown by the methods of paragraph (b) and either paragraph (c) or (d) of this section, that the airplane is free from flutter, control reversal, and divergence for any condition of operation within the limit V-n envelope and at all speeds up to the speed specified for the selected method. In addition—

* * * * *

(b) Flight flutter tests must be made to show that the airplane is free from flutter, control reversal and divergence and to show that—

* * * * *

(c) Any rational analysis used to predict freedom from flutter, control reversal and divergence must cover all speeds up to 1.2 V_D.

(d) * * *

(3) * * *

(i) Does not have a T-tail or other unconventional tail configurations;

* * * * *

(g) For airplanes showing compliance with the fail-safe criteria of §§ 23.571 and 23.572, the airplane must be shown by analysis to be free from flutter up to V_D/M_D after fatigue failure, or obvious partial failure, of a principal structural element.

(h) For airplanes showing compliance with the damage tolerance criteria of § 23.573, the airplane must be shown by analysis to be free from flutter up to V_D/M_D with the extent of damage for which residual strength is demonstrated.

(i) For modifications to the type design that could affect the flutter characteristics, compliance with paragraph (a) of this section must be shown, except that analysis based on previously approved data may be used alone to show freedom from flutter, control reversal and divergence, for all speeds up to the speed specified for the selected method.

§ 23.657 [Amended]

33. Section 23.657 is amended by removing paragraph (c).

§ 23.673 [Amended]

34. Section 23.673 is amended by removing paragraph (b) and the paragraph designation "(a)" for the remaining paragraph.

35. Section 23.725 is amended by revising the equation in paragraph (b) to read as follows:

§ 23.725 Limit drop tests.

* * * * *

(b) * * *

$$W_e = W\frac{[h+(1-L)\,d]}{(h+d)}$$

* * * * *

36. Section 23.755 is amended by removing paragraph (b), and by redesignating paragraph (c) as paragraph (b) and revising it to read as follows:

§ 23.755 Hulls.

* * * * *

(b) Watertight doors in bulkheads may be used for communication between compartments.

37. Section 23.865 is revised to read as follows:

§ 23.865 Fire protection of flight controls, engine mounts, and other flight structure.

Flight controls, engine mounts, and other flight structure located in designated fire zones, or in adjacent areas that would be subjected to the effects of fire in the designated fire zones, must be constructed of fireproof material or be shielded so that they are capable of withstanding the effects of a fire. Engine vibration isolators must incorporate suitable features to ensure that the engine is retained if the non-fireproof portions of the isolators deteriorate from the effects of a fire.

38. Section 23.925 is amended by revising paragraph (b) to read as follows:

§ 23.925 Propeller clearance.

* * * * *

(b) *Aft-mounted propellers.* In addition to the clearances specified in paragraph (a) of this section, an airplane with an aft mounted propeller must be designed such that the propeller will not contact the runway surface when the airplane is in the maximum pitch attitude attainable during normal takeoffs and landings.

* * * * *

39. Appendix A is amended by revising the heading, section A23.1, paragraphs A23.11 (c)(1) and (d), and Table 2; and by adding a new Figure A7 to the end of the Appendix to read as follows:

Appendix A to Part 23 Simplified Design Load Criteria

A23.1 *General.*

(a) The design load criteria in this appendix are an approved equivalent of those in §§ 23.321 through 23.459 of this subchapter for an airplane having a maximum weight of 6,000 pounds or less and the following configuration:

(1) A single engine excluding turbine powerplants;

(2) A main wing located closer to the airplane's center of gravity than to the aft, fuselage-mounted, empennage;

(3) A main wing that contains a quarter-chord sweep angle of not more than 15 degrees fore or aft;

(4) A main wing that is equipped with trailing-edge controls (ailerons or flaps, or both);

(5) A main wing aspect ratio not greater than 7;

(6) A horizontal tail aspect ratio not greater than 4;

(7) A horizontal tail volume coefficient not less than 0.34;

(8) A vertical tail aspect ratio not greater than 2;

(9) A vertical tail platform area not greater than 10 percent of the wing platform area; and

(10) Symmetrical airfoils must be used in both the horizontal and vertical tail designs.

(b) Appendix A criteria may not be used on any airplane configuration that contains any of the following design features:

(1) Canard, tandem-wing, close-coupled, or tailless arrangements of the lifting surfaces;

(2) Biplane or multiplane wing arrangements;

(3) T-tail, V-tail, or cruciform-tail (+) arrangements;

(4) Highly-swept wing platform (more than 15-degrees of sweep at the quarter-chord), delta planforms, or slatted lifting surfaces; or

(5) Winglets or other wing tip devices, or outboard fins.

* * * * *

A23.11 *Control surface loads.*

* * * * *

(c) * * *

(1) Simplified limit surface loadings for the horizontal tail, vertical tail, aileron, wing flaps, and trim tabs are specified in figures 5 and 6 of this appendix.

(i) The distribution of load along the span of the surface, irrespective of the chordwise load distribution, must be assumed proportional to the total chord, except on horn balance surfaces.

(ii) The load on the stabilizer and elevator, and the load on fin and rudder, must be distributed chordwise as shown in figure 7 of this appendix.

(iii) In order to ensure adequate torsional strength and to account for maneuvers and gusts, the most severe loads must be considered in association with every center of pressure position between the leading edge and the half chord of the mean chord of the surface (stabilizer and elevator, or fin and rudder).

(iv) To ensure adequate strength under high leading edge loads, the most severe stabilizer and fin loads must be further considered as being increased by 50 percent over the leading 10 percent of the chord with the loads aft of this appropriately decreased to retain the same total load.

(v) The most severe elevator and rudder loads should be further considered as being distributed parabolically from three times the mean loading of the surface (stabilizer and elevator, or fin and rudder) at the leading edge of the elevator and rudder, respectively, to zero at the trailing edge according to the equation:

$$P(x) = 3(\overline{w})\frac{(c-x)^2}{c_f^{\,2}}$$

BILLING CODE 4910–13–M

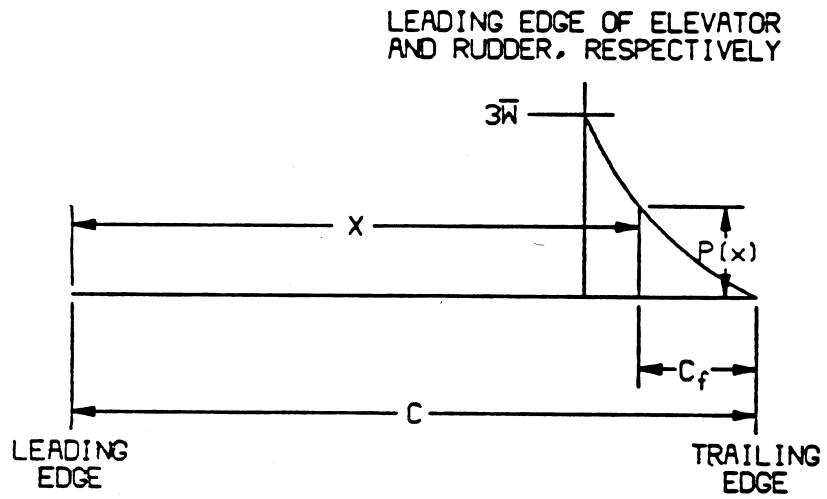

BILLING CODE 4910–13–C

Where—

P(x)=local pressure at the chordwise stations x,

c=chord length of the tail surface,

c_f=chord length of the elevator and rudder respectively, and

$\bar{w}$=average surface loading as specified in Figure A5.

* * * * *

(vi) The chordwise loading distribution for ailerons, wing flaps, and trim tabs are specified in Table 2 of this appendix.

(d) *Outboard fins.* Outboard fins must meet the requirements of § 23.445.

* * * * *

BILLING CODE 4910–13–M

Table 2 - Average limit control surface loading

AVERAGE LIMIT CONTROL SURFACE LOADING			
SURFACE	DIRECTION OF LOADING	MAGNITUDE OF LOADING	CHORDWISE DISTRIBUTION
Horizontal Tail I	a) Up and Down	Figure A5 Curve (2)	See Figure A7
	b) Unsymmetrical Loading (Up and Down)	100% $\bar{w}$ on one side of airplane ℄ 65% $\bar{w}$ on other side of airplane ℄ for normal and utility categories. For acrobatic category see A23.11(c)	
Vertical Tail II	Right and Left	Figure A5 Curve (1)	Same as above
Aileron III	a) Up and Down	Figure A6 Curve (5)	(C) 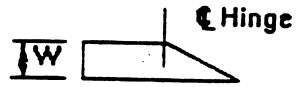
Wing Flap IV	a) Up	Figure A6 Curve (4)	(D) 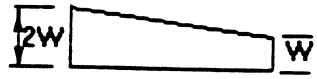
	b) Down	.25 x Up Load (a)	
Trim Tab V	a) Up and Down	Figure A6 Curve (3)	Same as (D) above

NOTE: The surface loading I, II, III, and V above are based on speeds V_A min and V_C min.

The loading of IV is based on V_F min.

If values of speed <u>greater than</u> these minimums are selected for design, the appropriate surface loadings must be multiplied by the ratio $\left(\frac{V_{selected}}{V_{minimum}}\right)^2$.

For conditions I, II, III, and V the multiplying factor used must be the higher of

$$\left(\frac{V_A \text{ sel.}}{V_A \text{ min.}}\right)^2 \quad \text{or} \quad \left(\frac{V_C \text{ sel.}}{V_C \text{ min.}}\right)^2$$

BILLING CODE 4910–13–C

* * * * *

Figure A7.—Chordwise Load Distribution for Stabilizer and Elevator or Fin and Rudder

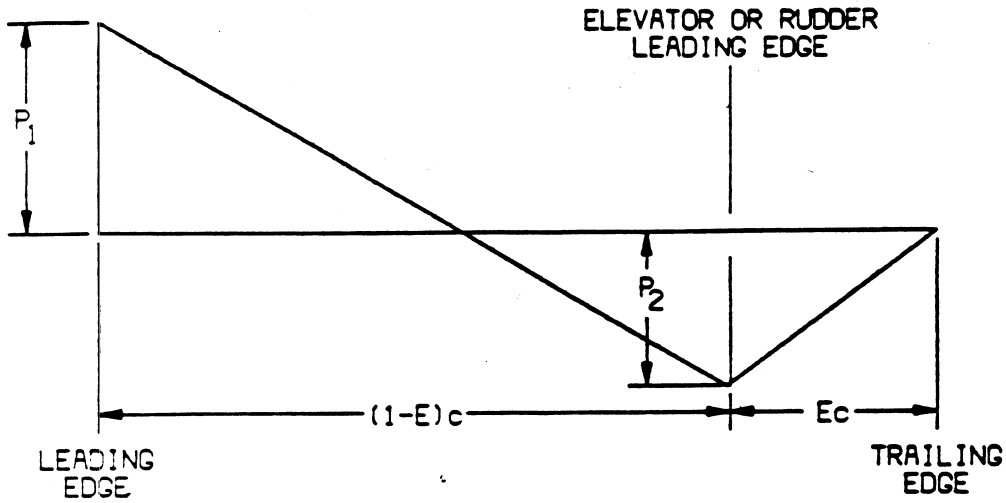

BILLING CODE 4910–13–C

$$P_1 = 2(\overline{w})\frac{(2-E-3d')}{(1-E)}$$

$$P_2 = 2(\overline{w})(3d'+E-1)$$

where:

$\bar{w}$=average surface loading (as specified in figure A.5)

E=ratio of elevator (or rudder) chord to total stabilizer and elevator (or fin and rudder) chord.

d'=ratio of distance of center of pressure of a unit spanwise length of combined stabilizer and elevator (or fin and rudder) measured from stabilizer (or fin) leading edge to the local chord. Sign convention is positive when center of pressure is behind leading edge.

c=local chord.

Note: Positive values of $\bar{w}$, P_1 and P_2 are all measured in the same direction.

Issued in Washington, DC, on January 29, 1996.

David R. Hinson,

Administrator.

[FR Doc. 96–2081 Filed 2–8–96; 8:45 am]

BILLING CODE 4910–13–M